STEM RACING™ SPAIN

Primary Competition Guidebook

(Ages 9-11)

Igniting the spark of innovation early.

26/27 Season

Welcome to the world of STEM Racing™, the journey of a lifetime starts here…

The STEM Racing Primary Class is where it all starts. You're about to design, make and race your own mini-F1 race car against other teams. This is the first step towards your dream career!

This guidebook contains everything you need to know to design and make a car, ready to compete at your nearest STEM Racing Regional Race Day. It's as easy as **1,2,3** – or in our case, **Design, Make, Race!**

Fast-track Project Management Plan:

1. Form a Team of 3-6, Register And Read The Rules!

- Form your team(s) of 3-6 members with clear job roles and register them at **stemracing.co.uk** so we know you are competing this year. Then as a team, read this guide very carefully one section at a time, so your design will be fit to race. Pay EXTRA SPECIAL attention to the **Technical Regulations, which are explained on page 10**.

2. Get Your Primary Class Starter Kits From Denford

- The starter kit contains all the standard components required to design and make your STEM Racing Primary Class car. **Please note: all Primary Class cars must be manufactured using this kit.**

3. Research Into The Science of Speed…

- As a team, learn about what makes objects travel fast through the air, through water and over land. Use this research to help you understand what you will need to do to make sure your car is as fast as possible. Keep a record of your work and findings, so you can use this to help plan your team presentation for the judges!

4. Design The F1® Car of The Future

- Have a go at our IsoSketch® design tutorials, which show you how to sketch the basic chassis of your STEM Racing Primary Class car. Then start designing a super cool aerodynamic body and some sleek wings onto the chassis. ***Remember no idea is too crazy at this stage, so do loads of sketches to experiment…***

5. Start Making Your Car!

- **Make sure your design is fully legal before manufacturing your car**. Decide how best to produce the body parts for your car, using either a computer-controlled (CNC) cutter or laser, or carefully by hand, using cutting tools.

6. Test The Aerodynamics of Your Car

- Get creative and think about how you can test the efficiency (how well it works) of your car's aerodynamics. Whether you have access to a test track, or have a go making your own simple wind tunnel, try a few variations of your design to see which one is fastest, then try to figure out why. Remember to record your findings for the judges!

7. Create a 5-page Design & Engineering Portfolio

- The judges want to see a **5-page** Design & Engineering Portfolio on Race Day. This should show your research, design sketches, models, and testing to explain how you designed, (developed) improved and made your car.

8. Create a 5-minute Verbal Presentation

- As a team, write and practice a verbal (spoken) presentation that lasts no longer than 5 minutes. You can use a PowerPoint presentation to help you along, but it's all about wowing the judges with your energy and enthusiasm!

9. Create a Table-top Display For Your Team Pit Garage

- There will be an award for the best Team Pit Garage Display on Race Day, so get creative to show off your team! Think about this like your team's shop front, maybe even with some small giveaway promotional items.

10. ROCK UP ON RACE DAY!

- Attend your nearest STEM Racing Race Day to ready to compete! See **stemracing.es** for full details

CONTENTS

What is STEM Racing?	04
How to get started	05
Car Design	06
Assessment	11
The Competition	16
Appendix	24

What is STEM Racing?

Hello and welcome to STEM Racing - The Formula 1® STEM Challenge!

I would like to give you a warm welcome to the challenge and hope you have fun working as a team to compete in this life changing experience. There are awards and prizes up for grabs to all teams who compete, both at your local Regional Final and at our UK Season Finale, the UK National Final!

Whether you've come here from the Denford Primary STEM Project or are starting fresh into STEM Racing, the competition is open to all UK based Primary and Secondary Schools, Colleges and Youth Groups. The challenge is simply to design, make and race innovative F1 cars of the future, using a combination of design and make skills and CAD / CAM software. The competition has four classes spanning Primary and Secondary education, **Primary Class (9-11)**, Entry Class (11-14), Development Class (11-19) and Professional Class (11-19).

Primary Class is open to anyone between the ages of **9-11**, in teams of **3-6 members**. By choosing Primary Class, you have given yourself the best possible chance of growing through the ranks to become one of the UK's top teams and ultimately fighting for a chance to reach our world finals, which is contested by over 50 countries!
Our rules committee have created this document to give you all the information needed to compete in the Primary Class competition, attend your nearest Race Day and compete for a chance to be crowned Regional and National Champions.
Best of luck, we look forward to seeing you on Race Day!

Andrew Denford
Founder and Chairman
STEM Racing™

How to get started

You can get involved in two different ways, either:

1. **Try out the Denford Primary Stem Project**

   This is a fully resourced classroom project in a box, which gives a full class the opportunity to design, make, test and race a STEM Racing-style car down a short 10m racetrack in their school. The project gives teams a chance to learn all about the science of speed and how to work as a team to create the fastest car. Cars designed and made for the Denford Primary STEM Project can be easily modified to compete, using the STEM Racing Primary Class 'Ready-to-Race' Pack, which is required to comply with all the technical and safety regulations needed to race on the 20m elevated competition racetrack.

2. **Prepare for your Regional Final using this booklet**

   You can start without any previous experience, just using this booklet and the STEM Racing Primary Class car kit, which can be purchased from Denford Ltd. Entry is free, so it's as simple as registering your team, working together to design, make and test your car, then competing at an official event!

Where to purchase equipment:

There are loads of equipment and consumables options to help you get started on your learning journey with STEM Racing Primary Class. You can purchase the full Denford Primary STEM Project classroom kit, competition-specific Primary Class starter kits, racetrack equipment, manufacturing equipment and more through Madcup, https://stemracing.es/material/

For more information, visit the websites at https://stemracing.es/material/ and www.primarystemproject.com

What you can win:

STEM Racing offers the chance to win money-can't-buy opportunities, along with a host of awards for your efforts. At Regional Finals, teams can win trophies for different areas of the competition, along with a 3rd, 2nd or 1st place trophy if they achieve a podium finish.

STEM RACING™ SPAIN

CAR DESIGN

What is a Primary Class Car?	07
What is the ‘Standard Chassis’?	08
Design Brief	09
Technical Regulations	10

What is a Primary Class Car?

Sometimes, we use words that describe parts of a car, which you might not have heard before. This page introduces you to some of these terms, so you'll understand what they mean and be able to use them to describe your own car! *Read through the following pages very carefully as a team!*

Your STEM Racing Primary Class Car must have these features:

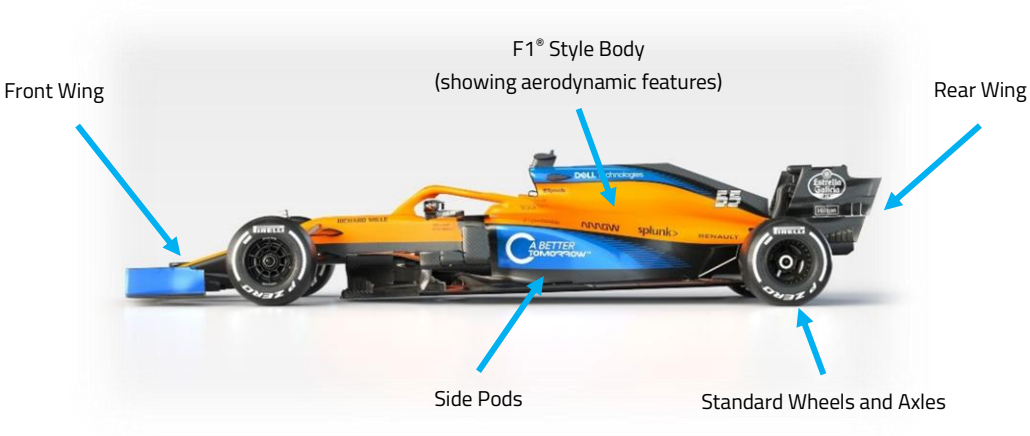

What is the Car Body?

The car body is the main shape of your Primary Class car. It is the exterior (outside) of the car including the front and rear wings and all other surfaces that you can see from the outside. The car body must be made from card, either made by hand using cutting tools or using a Computer-Numerically-Controlled (CNC) machine like a cutter plotter to cut the shape for you.

Wings - Commonly Used Terms:

- A **Leading Edge** is the edge of the wing that cuts through the air first (i.e. the front edge).
- The **Trailing Edge** is the edge that the air touches last as it leaves the wing (i.e. the back edge).
- **Wing Span** is a bit like the arm span of a human, or the wing span of a bird or plane. It is the total width between the ends of the wing, including the nose cone or body of the car.

These terms are all shown on the diagram below, make sure you understand what they all mean!

Wing Diagram:

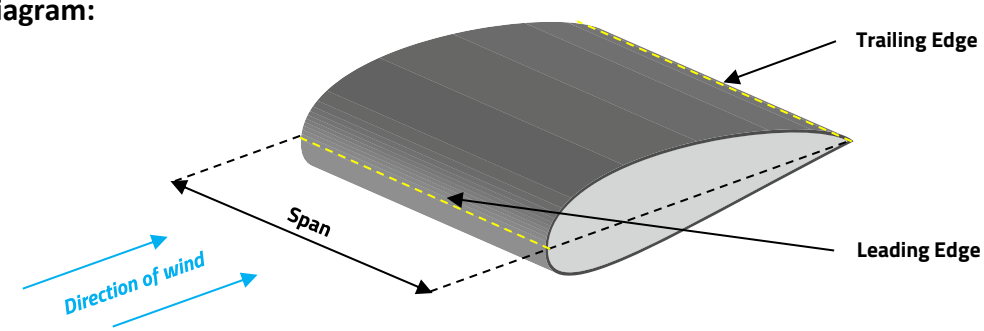

The ‘Standard Chassis’ and Engine Housing

What is a Chassis?

A car’s chassis is a bit like a human skeleton. Just like a skeleton, a car’s chassis is normally hidden underneath the surface so you can’t see it, but it’s the strong frame-like structure that holds all the important parts of a car together. In our case, the metal axles, plastic wheels, card engine housing and card body will all attach to the chassis, so it’s a really important part of your race car.

What is an Engine Housing?

The engine housing is like the compartment under a car’s bonnet where the engine lives, it’s a strong structure that contains the engine, so it doesn’t get out and drive away itself! In STEM Racing, the engine housing is a specially designed card chamber (like an open-ended box) that fits to the back of the car, containing the compressed air power pack (your car’s engine!). Your car MUST have this to compete.

Safety First:

Primary Class cars **must be safe to race** down our 20m elevated racetrack, powered by a compressed air power pack. To ensure this, the STEM Racing rules committee has created a ‘standard chassis’ that **car designers MUST use as a minimum** for their car. The ‘standard chassis’ has been carefully designed so you can still make your Primary Class car look like a real F1® racing car, so use all your imagination and styling ideas to make sure the body of your car completely hides the chassis hiding underneath it!
It is a **SAFETY** regulation that you use the standard chassis and engine housing as shown below, so make sure you cut and assemble these really carefully to avoid losing out on lots of points!

Isometric (3D) views:

Chassis:

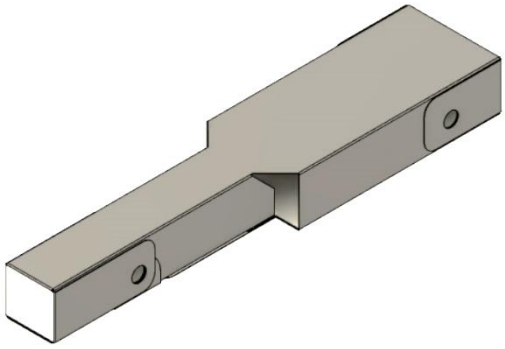

Engine Housing:

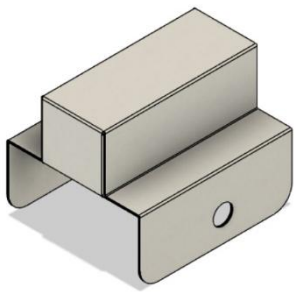

Note: The best way to start designing your Primary Class car is to watch our **IsoSketch® tutorial on YouTube,** for a step-by-step guide to sketching the standard chassis. After that, you can get really creative with the body, add some crazy wings and unique styling features to your car! *Full dimensions can be also found at the back of this guidebook in Appendices i and ii.*

The Design Brief

Your task is to design, make, test and race a miniature F1® racing car made from card, which will race down the STEM Racing 20m elevated racetrack, powered by a compressed air Power Pack. You must use a range of techniques to show design work, including freehand 3D sketches **and** card modelling skills.

Car Design Features:

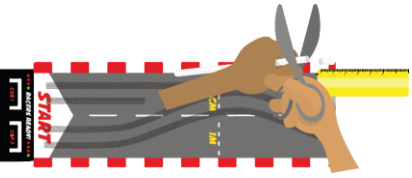

Your STEM Racing Primary Class car must include the following design features:

- F1® style body including side pods
- Front Wing
- Rear Wing
- Standard STEM Racing wheels, axles, axle bushes and tether line guides

Note: See 'Technical Regulations' (next page) for all body and wing dimensions

Body Manufacturing:

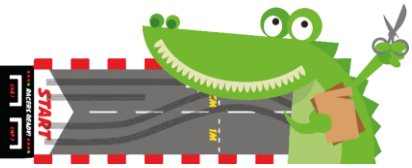

In Primary Class, there are **three** manufacturing options for your car body:

- **Option 1:** The car body can be manufactured using a CNC cutter plotter (such as the silhouette cameo) from 160gsm card. This means the design must be drawn on a computer, using a CAD package such as Silhouette Studio.
- **Option 2:** The car body can be manufactured using hand tools (such as scissors, safety knives, hole punches) from 160gsm card. This means the design can be drawn by hand, or on a computer before being printed out.
- **Option 3:** The car body can be manufactured entirely using a standard F1 car body net, supplied by STEM Racing. Please note, teams will earn less points by using this method as the design is provided.

Driver (optional):

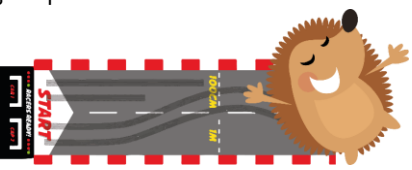

You have the option to add a driver, made from any material or components the team sees fit. The driver is included in the total weight of the car and must sit on top of the chassis. Cutting a hole into the chassis is not allowed for safety reasons.

Now turn over for a checklist of how to design your STEM Racing Primary Class car…

Technical Regulations:

Technical Regulations dictate how the car must be designed so it is suitable to compete. You'll earn points for passing each regulation, so double check your car is fully legal and ready to race BEFORE you arrive on race day! Here is an explanation of the different types of rules in STEM Racing and what they mean:

Regulation type:	Purpose:	Points:	Extra penalty:
GENERAL	Aesthetics (looks) of the car	5-20	None
SAFETY	Suitability to race	10	Car may require modification or not race
PERFORMANCE	How fast the car can travel	20	Ineligible for Fastest / Best Eng. Car award

PC1.1 Standard Chassis / Engine Housing - [SAFETY | 10pts]

Primary Class cars **MUST** use the standard chassis and engine housing, unmodified in any way.

PR1.2 Body construction method - [GENERAL | 5-20pts]

PR1.2.1 Make option 1 (20pts): The car body MUST be made using some CAD / CAM technologies

PR1.2.2 Make option 2 (20pts): The car body MUST be made using hand tools and manual skills

PR1.2.3 Make option 3 (5pts): The car body can be made from a pre-supplied F1 car body net

PR 1.3 Car Construction Material - [SAFETY | 10pts]

Primary Class cars MUST use only card to manufacture the car chassis, engine housing, body and wings.

Min: 160g/m2

PR1.4 Overall Body Length - [GENERAL | 5pts]

The total length, measured between the front and rear extremities of the car, including any styling features.

Min: 200mm / Max: 250mm

PR1.5 Graphics - [GENERAL | 5pts]

To make your car easy to identify, some graphic (visual) elements should be clearly displayed on the car.

Mandatory graphics: Team name / team logo

PR1.6 Front Wing Span [PERFORMANCE | 20pts]

The total width of the front and rear wings measured from the widest point across the wing.

Min: 60mm / Max: 80mm

PR1.7 Rear Wing Span [PERFORMANCE | 20pts]

The total width of the front and rear wings measured from the widest point across the wing.

Min: 60mm / Max: 80mm

PR1.8 Wheels - [PERFORMANCE | 20pts]

Primary Class cars MUST use the STEM Racing standard wheel, unmodified in any way.

PR1.9 Axles and Axle Bushes - [SAFETY | 10pts]

Primary Class cars MUST use two (2) standard axles and four (4) axle bushes, unmodified in any way.

PR1.10 Tether Line Guides - [SAFETY | 10pts]

Primary Class cars MUST use two (2) standard tether line guides, unmodified in any way, securely attached.

PR1.11 Total Car Weight - [PERFORMANCE | 20pts]

The minimum weight the complete car must be to race, including wheels, axles, stickers and optional driver.

Min: 40g

ASSESSMENT

This symbol means competition points will be awarded

Design & Engineering Portfolio:	12
Verbal Presentation:	13
Future Vision (award only):	14
Pit Garage Display (award only):	15

Design & Engineering Portfolio

You must produce a printed (or 'hard-copy') **5-page** Design & Engineering Portfolio to show to the judges on Race Day, explaining how you designed, tested and made your STEM Racing car. You can use physical models to help explain your work to the judges. Below is a checklist of suggestions for what to include in your Design & Engineering Portfolio.

Contents:

Your Design & Engineering Portfolio should contain evidence of the following:

- **Initial Ideas** – including 3D freehand sketches
- **Design Development** – including images of any models and testing
- **Testing** – showing / explaining how you tested your car, what you found out and what you then changed
- **Manufacturing** – including photos and descriptions of how you cut and assembled the parts of your race car
- **Team Graphic Identity** – including team name, logo and car livery (colour scheme and patterns)

Format:

The judges will visit you at your Pit Garage, to look through your portfolio and speak to you about how you've designed and manufactured your race car. The format of your Design & Engineering Portfolio is up to you, choose between either:

- **A4** – landscape or portrait
- **A3** – landscape or portrait

Note: Please make sure your Design & Engineering Portfolio is presented in full colour and stapled or bound.

Additional Information:

You may choose to include the following sections, which do NOT count towards your 5-page limit:

- Decorative front cover
- Contents page

Note: You MUST clearly display your team name on the front page of your Design & Engineering Portfolio. Your portfolio must be clearly displayed at your Pit Display on the morning of Race Day.

Verbal Presentation

You must prepare a **5-minute** verbal presentation to deliver to the judges on Race Day, explaining how you got to where you are today and all the things you've learned so far in your STEM Racing journey. You may also produce an electronic presentation to accompany your verbal presentation if you wish.

Content:

Your verbal presentation is your chance to tell the judges your story! It is completely up to you how you structure your presentation, but here are some suggestions to help make you stand out!

- Tell the judges why you got involved in STEM Racing
- Describe what you found the most enjoyable and the most difficult – the judges appreciate honesty!
- Who did what, how you planned your time and how you think it turned out (good and bad!)
- Describe any collaborations (partnerships) you formed to help you through the project
- Explain what you've learned, both individually and as a team, including any new skills you've gained

Style:

There are NO rules about how to deliver your verbal presentation; do it stood on your head, sing the judges a song, act it out like a school play. Just do what feels most comfortable to you. All we ask is that:

- **Everyone takes part!** – make sure every member of the team has a speaking part
- **You don't go over 5 minutes** – the judges need to ask you questions so no waffling!

Format:

You may use an electronic presentation (e.g. PowerPoint), background music or props, it's totally up to you! Just try to make your presentation as engaging (interesting) as possible, so the judges won't be able to forget your team in a hurry…

Note: Any electronic presentations MUST be saved to a memory stick. Please also bring a laptop to run these presentations on, as we cannot provide one for you!

Future Vision

(AWARD ONLY)

We know what the cars of today look like, we even have a pretty good idea what they will look like in two or three years, but what might they look like in 10 years' time? That is up to you! On Race Day, you will be set the challenge to create some designs for the F1 car of the future. The judges are always looking for the next BIG idea, so use all your imagination to show them something they've never seen before!

The judges will be looking for you to demonstrate the following:

- **Sketch** – including 3D freehand sketches, present your ideas in 3D to the best of your ability
- **Annotate** – make notes on your design to show what features you think F1 cars will have in 10 years' time
- **Create** – your vision for the car of the future by designing a team name and logo for your amazing creation

Format:

You'll be given an official submission sheet at your Race Day, with space to design and annotate your idea. Use this to create your design for the F1 car of the future, so make sure you take some stationery with you to draw and write with.

Note: You can practice your sketching skills in advance, by using our sketching tutorial videos to learn how to draw the chassis and body of your car. Like any skill, there is no easy way to become a master, but each time you practice you'll get a little bit better so stick at it!

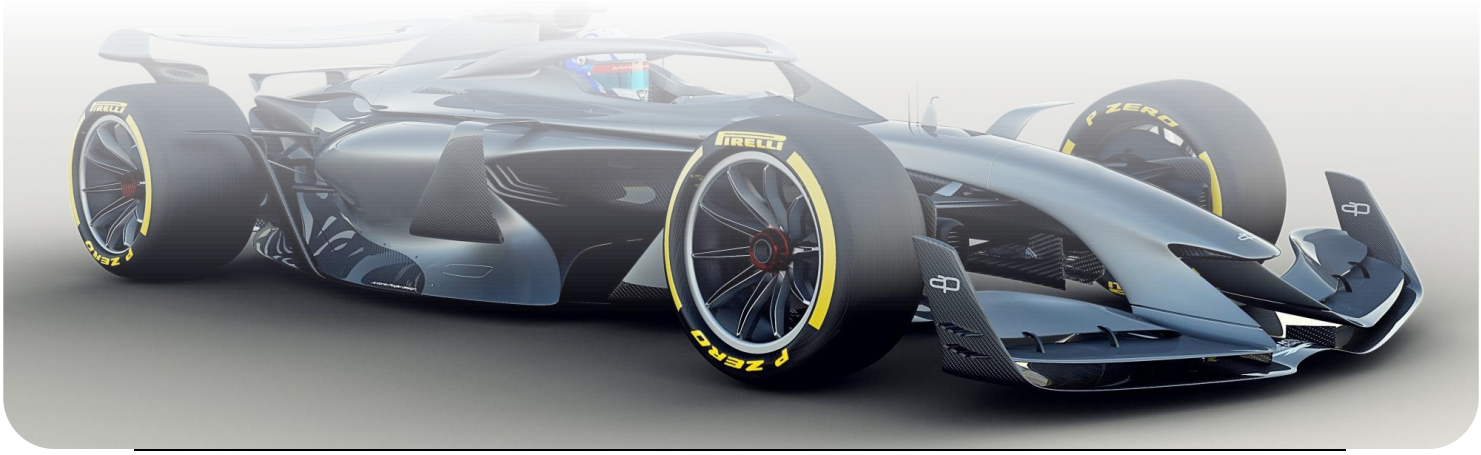

Pit Garage Display

(AWARD ONLY)

Each team is given a 'Pit Garage' area including a table on Race Day. This will become your base for the day and is the perfect space to create a team display. This is not assessed as part of the competition, but when the judges visit you, they are keeping their eyes peeled to give an award to the best display on the day. Make sure you stand out!

Content:

The Pit Garage Display is your opportunity to share all your design work, models and prototypes, creating an attractive area that teams and judges will want to come and look at. The Pit Garage Display can be made up of several elements, so here are some suggestions to help make you stand out!

- Show a range of 'behind the scenes' design work, not just your Design & Engineering Portfolio.
- Make sure it's clear whose Pit Garage Display it is – add your team logo and colours to make it obvious.
- Judges love cupcakes. In fact, most people love a freebie, so why not bring something to give away?
- Give it height! To make it visually appealing, having raised items helps create a better look.

Remember there is **no scorecard** for the Team Pit Garage Display, just an award for the best display, so have some fun with it! The judges will be looking for interesting and engaging displays, so have a think about what you could bring along with you. When you compete in the Development and Professional classes, the Pit Garage Display is assessed as part of the competition, so get some ideas and make sure you find out what makes a really impressive Pit Garage Display.

THE COMPETITION

How it works – Race Day 17
How it works – Judging 18
Judging Scorecards 19
Next Steps – Entry Class 22

Race Day – What to Expect

Race Day happens at your nearest UK Regional Final, which brings together teams from different schools in your local area. You'll be sharing the track and Pit Garage area with the other teams, so it's a great chance to get to know your competition and make some new friends! This is your chance to check out the competition and work out what you can do as a team to improve in every area.

Registration & Car Scrutineering

- When you arrive you'll register with the staff at the venue, where you'll be given some important information including your judging timetable. Then, you must take your car immediately to the Scrutineering area, where our judges make sure your car will be ready to race. **Make sure your car is ready to hand in when you arrive!**

Welcome Presentation

- After a short set-up period to get your Pit Garage set up, we will hold the official welcome and explain the format of the day. Get ready to wave your arms in the air and cheer as your team name is called out!

Future Vision

- You will be given your submission sheets at the start of the day. You'll have all day to put your best designs down on paper for the judges to look at, so make sure you use all your spare time to be as creative as possible!

Judging: Design & Engineering Portfolio

- Our team of expert judges will visit your team Pit Garage and look through your portfolio with you. This is a great chance to speak to the judges informally and explain everything you've done and what you've learned!

Judging: Verbal Presentation

- Your team will deliver a 5 minute verbal presentation to our judges, explaining what you have done to get here. The judges will ask you a few questions relating to your presentation, most importantly they will want to know what you'll do differently when you come back next time... Remember to relax, smile and enjoy your presentation!

RACE!

- You will go head-to-head in four races against another Primary Class team, to compete for the top spot on our leaderboard. Racing will consist of 2 timed runs in each lane of the 20m STEM Racing elevated race track.

Judges Debrief & Awards Ceremony

- After all the judging has been completed, the team of judges will gather to discuss their scores and work out who will go home from Race Day with our various awards. Awards will be handed out to teams for all sorts of different achievements, including announcing who will take 3rd, 2nd and Regional Champions on the podium. The top teams will be going through to the Spain National Finals, where the chance to become the Spain National Champion awaits.

The Judges - what they're looking for:

The judges will have a total of 500 points to give you throughout the day and will score your work in four areas: Car Scrutineering, Design & Engineering Portfolio, Verbal Presentation and Racing.
Below is a quick guide explaining how the judges score your work, on the next pages are the official Primary Class score cards so you can see exactly what the judges are looking for!

Car Scrutineering

- Your car will be assessed and hopefully declared safe to race by our judges, who will check your car against the Technical Regulations on Page 10. Car Scrutineering will be scored using the scorecard on page 19.
- **Total points available for Car Scrutineering: 170**

Design & Engineering

- Your Design & Engineering and Brand Identity will be assessed by the judges and given a score based on a number of criteria, as described on page 12. Portfolios will be scored using the scorecard on page 20.
- **Total points available for Design & Engineering: 120**

Verbal Presentation

- The judges will listen to your 5 minute presentation and give you a score based on a number of criteria, as described on page 13. Verbal presentations will be scored using the scorecard on page 21.
- **Total points available for Verbal Presentation: 110**

Racing

- You will be awarded racing points depending on how you perform on track. Points will be awarded for your reaction time, the time your car takes to complete the track and the combined 'total race time'.
- **Total points available for Racing: 100**

Now have a look at the judging scorecards to see exactly what the judges will be awarding points for when they meet you on Race Day…

Car Scrutineering Scorecard

Team Number:
Team Name:
School:

Specifications					
Regulation	**Summary**	**Criteria**	**Points available**	**Pass/Fail**	**Score**
PR1.1	Chassis / engine housing	Standard items only, unmodified	10		
PR1.2	Body construction (award points for one ONLY)	**PR1.1.1**: CAD / CAM	20		
		PR1.1.2: Handmade	20		
		PR1.1.3: Pre-supplied net	5		
PR1.3	Construction material	Card – minimum 160g/m2	10		
PR1.4	Overall body length	Min: 200mm / Max: 250mm	5		
PR1.5	Graphics	Mandatory team name / logo	5		
PR1.6	Front wing span	Min: 60mm Max: 80mm	20		
PR1.7	Rear wing span	Min: 60mm Max: 80mm	20		
PR1.8	Wheels	Standard wheels	20		
PR1.9	Axles and axle bushes	Standard axles and axle bushes	10		
PR1.10	Tether line guides	Standard guides	10		
PR1.11	Total car weight	Min: 40g	20		
				Specifications Total	**/150**

Aesthetics				
F1® style body	Few recognisable F1® design features	Attempt to create F1® style body with most features present	Highly recognisable F1® style body design, including side pods, front and rear wing and nose cone	
	1 2 3	4 5 6 7	8 9 10	
Quality of Finish and Assembly	Limited quality of finish	Mostly well assembled and engineered	Professional assembly, engineered. Sound techniques	
	1 2 3	4 5 6 7	8 9 10	
			Aesthetics Total	**/20**
			Specifications Total + Aesthetics Total = Car Scrutineering Total =	**/170**

Notes:

Design & Engineering Scorecard

Team Number:
Team Name:
School:

Car Design Process				
Initial Ideas	Few rough ideas of value	Good range of initial ideas showing different styles of car. Some notes explaining design decisions	Wide range of ideas, including CAD, freehand 3D sketches and test models to show possible solutions. All designs clearly annotated with design justifications	
	1 2 3 4	5 6 7 8 9 10 11	12 13 14 15 16 17 18 19 20	
Design Development	Little progress made from initial ideas	Evidence of design decisions made between initial idea and final design, with some links to testing	Clear and logical design development, showing stages of development from initial idea selection to final design. All decisions justified by testing results where relevant	
	1 2 3 4	5 6 7 8 9 10 11	12 13 14 15 16 17 18 19 20	
Testing	Limited use of basic testing techniques	Logical testing undertaken, providing some useful data or conclusions. Some linked suggestions for improvements.	Appropriate and thorough testing conducted, providing valuable results. Results analysed and used to guide design development process with clear conclusions	
	1 2 3 4	5 6 7 8 9 10 11	12 13 14 15 16 17 18 19 20	
Manufacturing	Little manufacturing details	Some manufacturing processes described and issues presented	Detailed account of manufacturing processes used, stages, materials & issues encountered with signs of evaluation	
	1 2 3 4	5 6 7 8 9 10 11	12 13 14 15 16 17 18 19 20	
Document Presentation	Difficult to follow with basic presentation	Document clearly structured and well organised	Document is easy to read and has a very high standard of presentation throughout. Consistent and clear organisation	
	1 2 3 4	5 6 7 8 9 10 11	12 13 14 15 16 17 18 19 20	
			Car Design Process Total	**/100**

Brand Identity				
Graphic Identity	Inconsistent, limited or obscure identity	Effective brand identity consistent through various project elements e.g. car matches team uniform	Excellent and highly effective brand identity. Visual 'brand' consistently applied through all project elements, with clever use of team name and motto	
	1 2 3 4	5 6 7 8 9 10 11	12 13 14 15 16 17 18 19 20	
			Brand Identity Total	**/20**

Car Design Process Total + Brand Identity Total = Design & Engineering Total =	**/120**

Notes:

Verbal Presentation Scorecard

Team Number:
Team Name:
School:

Technique				
Team Contribution	Minimal team participation	Good contributions from most team members	Excellent teamwork with all members participating effectively	
	1 2 3	4 5 6 7	8 9 10	
Energy and Engagement	Artificial and/or low energy, minimal audience engagement	Speakers generally enthusiastic with lively delivery, some audience connection at times	Passionate with effective and appropriate levels of liveliness, audience fully engaged and excited throughout presentation	
	1 2 3 4	5 6 7 8 9 10 11	12 13 14 15 16 17 18 19 20	
Time / Presentation	Too fast or ran out of time. Lack of clear structure	Good timing. Balanced topic depth and pace. A basic structure / outline provided and could be followed by audience	Ran on time or under. Excellent balance of depth for each topic. Clear presentation outline / overview. Excellent connections between topics and easy for audience to follow	
	1 2 3 4	5 6 7 8 9 10 11	12 13 14 15 16 17 18 19 20	
			Technique Total	**/50**

Content				
Project Management	Little evidence of planning or reflection	Planning and evaluation limited to short sentences with some justification, some ideas for improvements	Well planned with clear roles. Justified evaluation, clearly describing strengths and difficulties experienced. Justified suggestions for improvement throughout	
	1 2 3 4	5 6 7 8 9 10 11	12 13 14 15 16 17 18 19 20	
Collaboration	Little collaboration	Some links with industry or higher education described	Collaborations with industry and/or higher education explained and justified, with description of outcomes achieved	
	1 2 3 4	5 6 7 8 9 10 11	12 13 14 15 16 17 18 19 20	
Learning Experiences	No real reflections discussed	Good explanation of some learning outcomes	A range of personal, lifelong learning and career skills acquired	
	1 2 3 4	5 6 7 8 9 10 11	12 13 14 15 16 17 18 19 20	
			Content Total	**/60**
			Technique Total + Content Total = Verbal Presentation Total =	**/110**

Notes:

STEM RACING™ SPAIN

Entry Competition Guidebook

(Ages 11-14)

Creating the perfect foundation.

NEXT STEPS...

26/27 Season

Next steps: Entry Class

Open to anyone between 11-14 years, Entry Class follows on from Primary Class. The biggest change being that Entry Class is the first taste of designing, making and racing a solid block model F1 car, manufactured from resistant materials. Entry Class allows you to compete alongside teams from Development and Professional Class, so you'll be able to see more experienced teams and learn what it takes to progress to the highest level of STEM Racing. All our Entry Class Regional Champions will win a special VIP invitation to attend and spectate at the season finale, our Spain National Finals. Looking ahead and learning what comes next will be the most important thing if you want to be in with a chance of being one of the world's top teams, so Entry Class is the perfect next step on the journey to one day becoming a World Champion.

.

Lift off to a dream job: Catspeed, Revolution X y FormulaMax, Entry Class Spain National Champions 2024/25

Your dream career starts here...

To download and start reading the rules and regulations for Entry Class, visit stemracing.es

APPENDIX

Appendix i:	Chassis	25
Appendix ii:	Engine Housing	26
Appendix iii:	Wheels	27
Appendix iv:	Axles	27
Appendix v:	Ready-to-Race Checklist	28
Appendix vi:	Track Rules	29
Appendix vii:	Essentials Checklist	30

Appendix i. Standard Chassis

Visit the **STEM Racing UK** YouTube channel, to see how to sketch the standard chassis in 3D, then start designing the body for your racing car. Get your best pencil ready for action!

Orthographic (2D surface) View:

Top View: **Side View:** **Bottom View:**

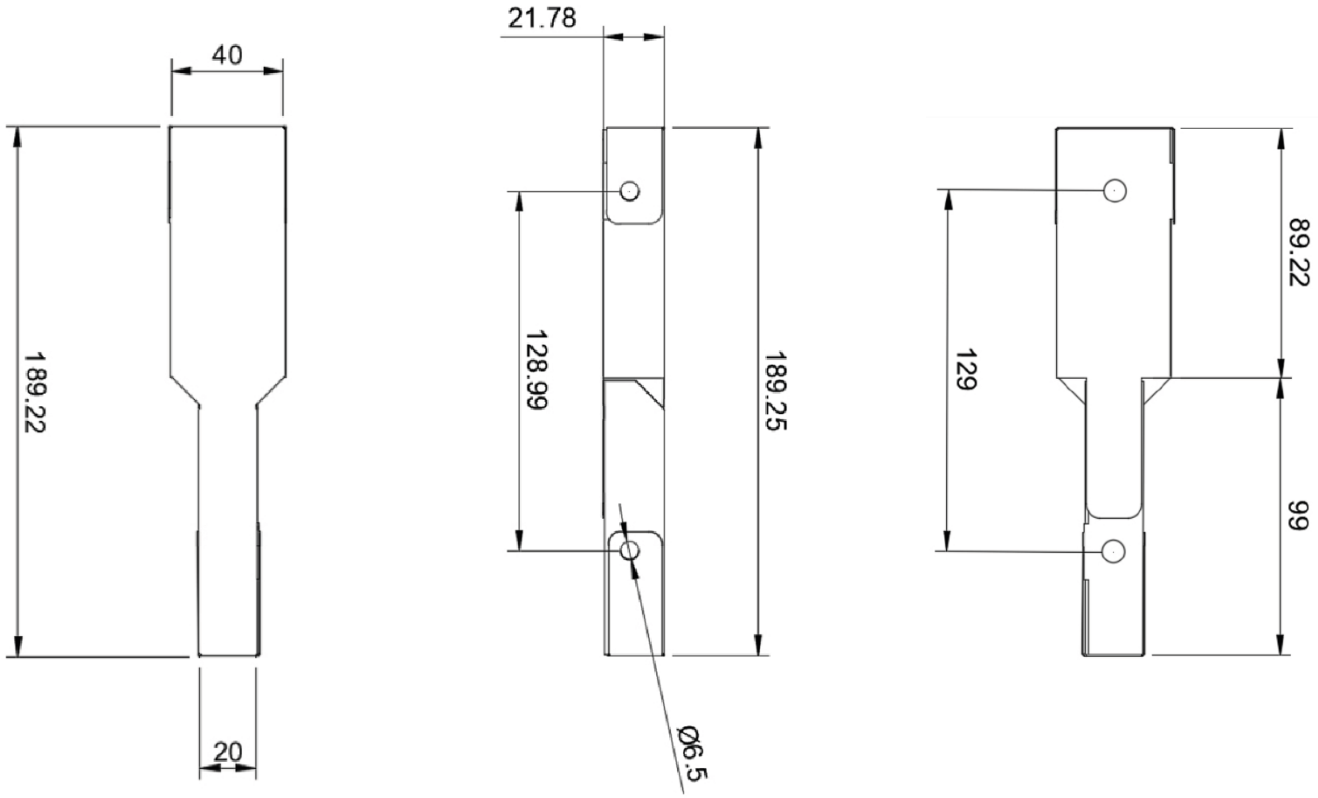

Isometric (3D shape) View:

Top View: **Bottom View:**

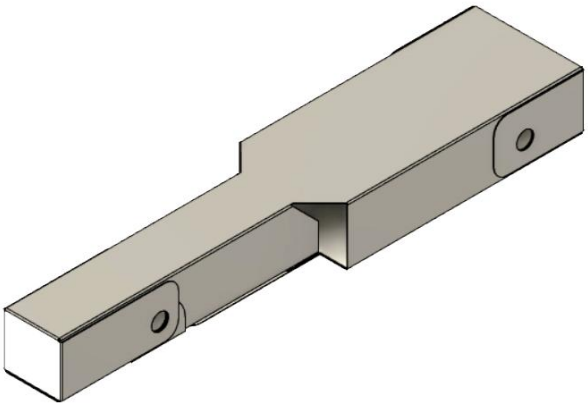

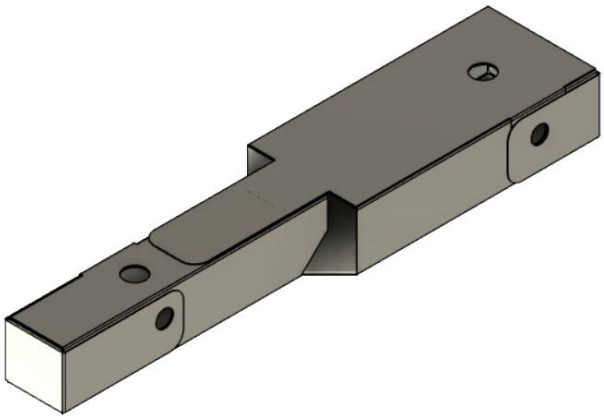

Appendix ii. Standard Engine Housing

Orthographic (2D surface) View:

Front View:

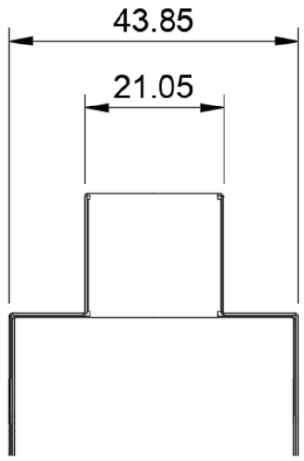

Side View:

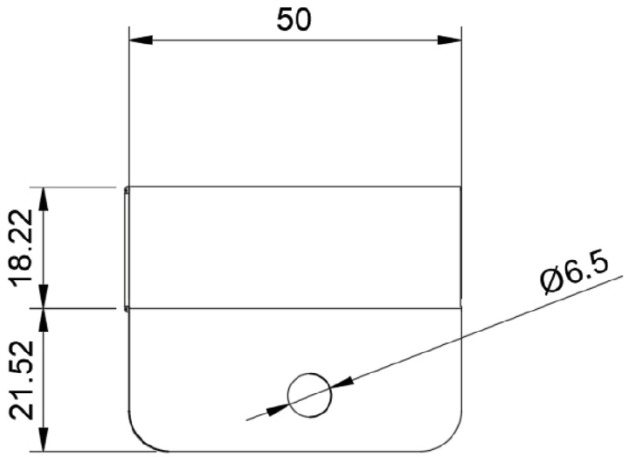

Isometric (3D) View:

Top View:

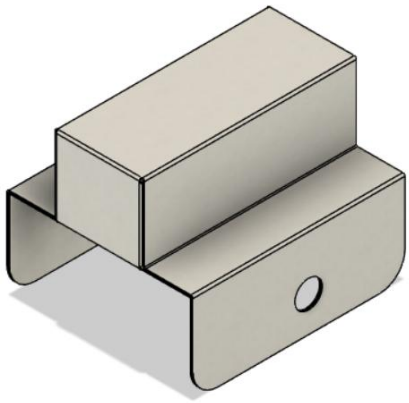

Bottom View:

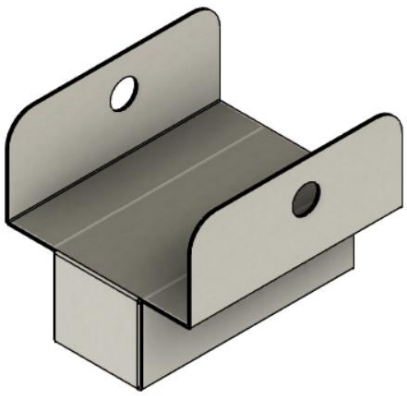

Appendix iii. STEM Racing Standard Wheel

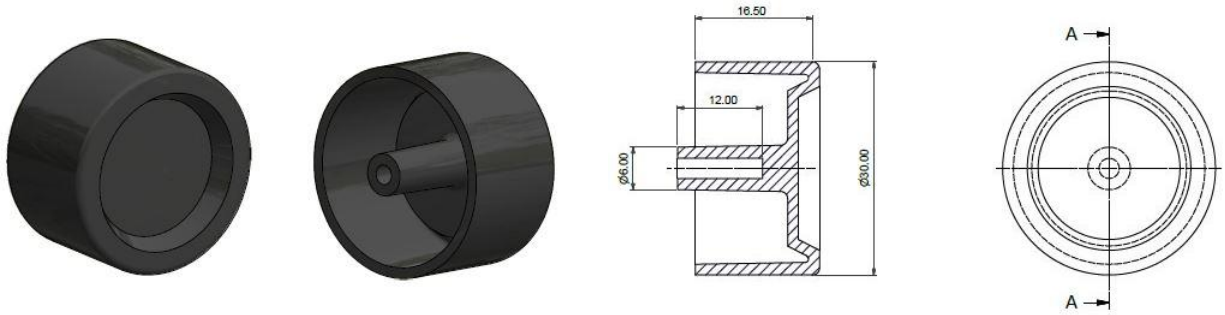

Individual wheel weight: 3.5-3.8g

Appendix iv. Standard Axle

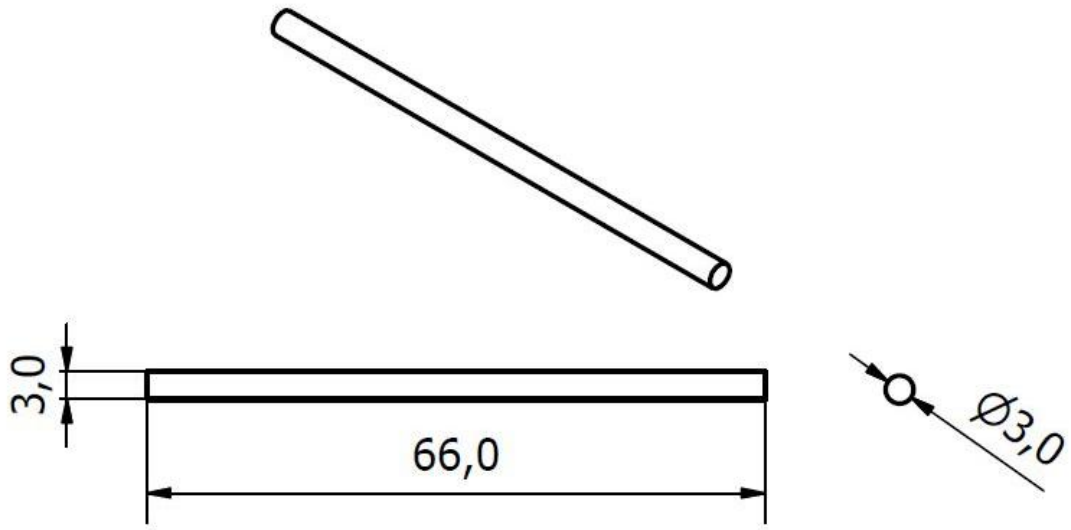

Individual axle weight: 4.0g

Appendix v. Ready to Race Checklist

Your car must be presented in a 'Ready-to-Race' state on competition day, which means it will be safe to attach to and race on the official 20m elevated racetrack. The diagram below shows the important features required for your car to race. If you have built your cars for the Denford Primary STEM Project, the components below are included in the 'Ready-to-Race Pack'.

Top Isometric (3D) View:

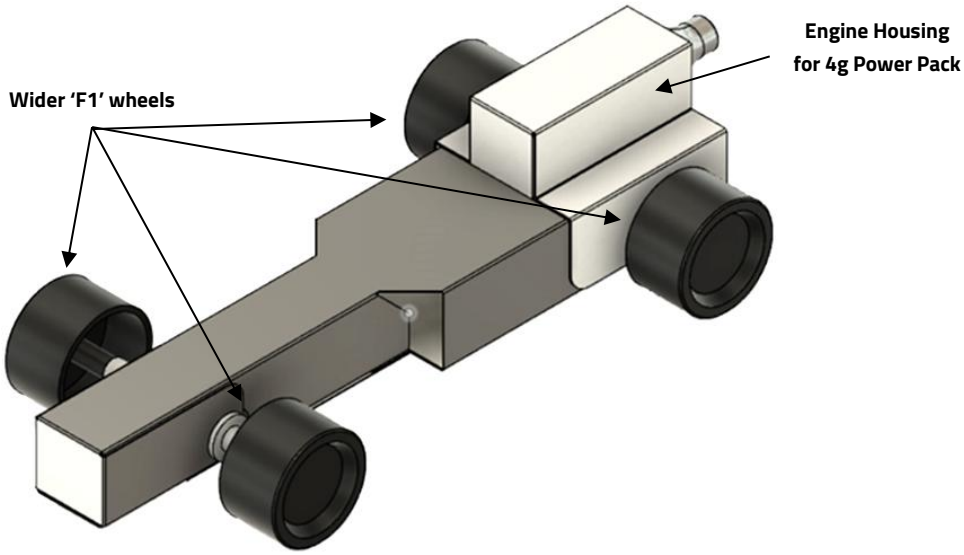

Bottom Isometric (3D) View:

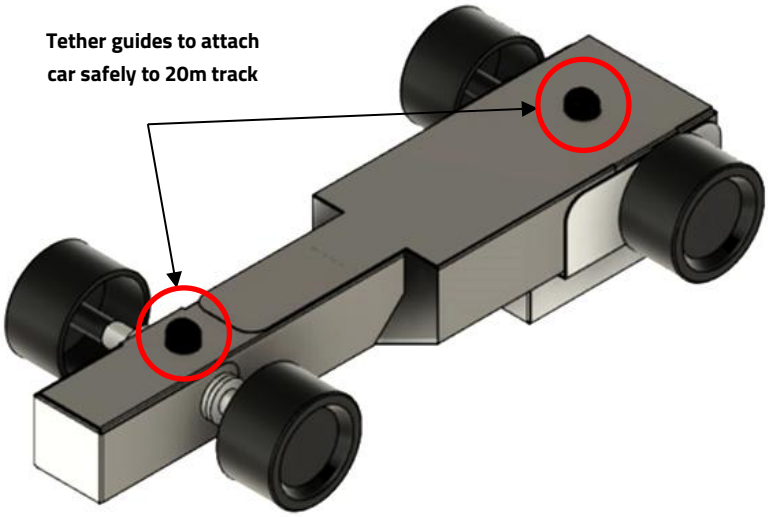

Appendix vi. Track Rules

Track, Tether Line and Timing System

- The F1 Racetrack, as manufactured by Denford Ltd, will be used either as a roll-out floor racetrack or solid elevated racetrack. The official length of the track from start line to finish is 20 metres.
- Launch / Timing System – The F1 Race Control System will be used for launching cars and timing races and driver reaction times to 1/1000th of a second.

Format and Scoring

- The STEM Racing Primary Class racing points will be awarded through **4 (four) races,** two races in each lane. The single fastest 'car race time' value from all races will determine the Fastest Car Award. Only cars showing 100% compliancy with the **Performance Regulations** are eligible for the Fastest Car Award. Teams may swap drivers as many times as they wish, up to 4 (four) times.

Racing

- All cars must complete two runs each and remain intact until the car crosses the line at the end of the second race.
- Damage occurring during a race, before the car crosses the finish line, (e.g. wheel or any other part of the car becoming separated), or car not crossing the finish line at all, effects in a DNF (Did Not Finish) race result. The judges may refer to video evidence to verify a DNF result.
- A false start (jump start) occurs when the driver depresses the trigger button before the 5 start gate lights have extinguished. This will be signalled with the outer red light above a lane illuminating.

Repair and Maintenance

- No repair or maintenance is to be carried out after the car has been registered and submitted without the permission of Engineering in Motion staff.
- If any entry becomes damaged during the event, teams will be allowed to use their spare car, as long as the Judges have determined that the spare car is identical to the original. In the unlikely event that the second car also becomes damaged, the entry will be evaluated by the event coordinator. This is the only reason a team should be allowed to tamper with their car after registration.
- Wheels that come off during the race may be replaced as determined by the race coordinator. Damaged wheels may only be replaced with the permission of the event or race coordinator.

Safety

- Judges will be carefully examining all cars and will only allow them to race if they deem them structurally sound. Should a car be judged not safe to race, teams may be given the opportunity to carry out modifications at the discretion of the judges.
- Any modifications must be supervised by the judges and approved before a car is deemed safe to race. If a car is still deemed not safe to race, the judges reserve the right to remove it from any racing events.

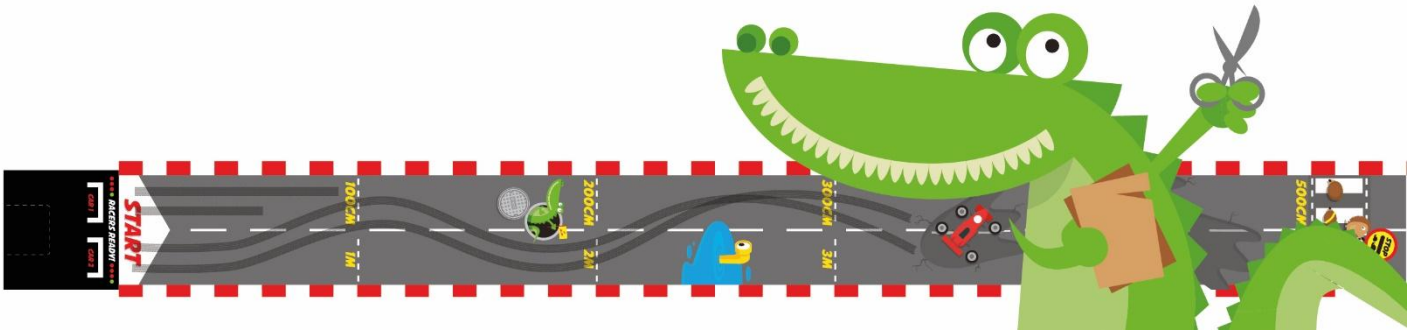

Appendix vii. Essentials Checklist

Below is a helpful checklist, showing some of the essential items you'll need for designing, making and competing in the STEM Racing Primary Class:

Essential Classroom Kit:	**(TICK)**
Tools / Equipment:	
CNC Cutter Plotter (e.g. Silhouette Cameo)	
Safety / Craft Knives (to be used only by adults or under close supervision)	
Scissors	
Measuring Rule (metal / plastic)	
Hole Punchers (single or double)	
Glue (water-based stick adhesive such as Pritt stick)	
Sticky Tape / Double-Sided Tape	
Stapler	
Materials:	
160gsm (minimum) White / Coloured Card	
Coloured Self-adhesive Vinyl for Making Stickers	
Standard Parts:	
Standard Chassis/Engine Housing (either pre-stamped or downloaded from STEM Racing)	
Standard Axles and Axle Bushes	
Standard Wheels	
Standard Tether Line Guides	
Race Day Essentials:	
Assessment Items	
1 x Complete STEM Racing Primary Class Car	
1 x 5-page Design & Engineering Portfolio	
1 x Rehearsed Verbal Presentation (bring a laptop if you have an electronic presentation)	
1 x Display for your team's Pit Garage	
Emergency Tools / Equipment:	
Spare 160gsm Card	
Sticky Tape	
Blu-tack	
Food / Drink	
Basic First Aid Kit	

Good Luck, See You on Race Day!

If you need any help at all, just get in touch with us:

STEM Racing™ Spain

T: 01484 728 100
E: contacto@stemracing.es
W: stemracing.es