STEM RACING™
SPAIN

2025/26 ENTRY COMPETITION REGULATIONS

Welcome to the world of STEM Racing, you're in for an exciting ride!

The STEM Racing Entry Class is your first step on the way to becoming World Champions, starting off with the chance to be crowned Regional Champions in your first season...

This guidebook contains everything you need to know to design and make a car, ready to compete at your nearest STEM Racing Race Day. It's as easy as **1,2,3** – or in our case, **Design, Make, Race!**

Project Management Plan:

1. FORM A TEAM OF 3-6, REGISTER AND READ THE RULES!

Register your team of 3-6 members so we know you are competing this year. Then as a team, read this guide very carefully one section at a time, so your design will be fit to race.

2. Get your Entry Class starter kit from your ICC

The starter kit contains all the standard components required to design and make your STEM Racing Entry Class car. **Please note: all Entry Class cars must be manufactured using this kit.**

3. Design the F1® car of the future

Have a go at our IsoSketch® tutorial, which shows you how to sketch the basic chassis of your STEM Racing Entry Class car. Then start designing a super cool aerodynamic body and some sleek wings onto the chassis. ***Remember no idea is too crazy at this stage, so do loads of sketches to experiment...***

4. Download the Entry Class CAD files from here:

https://stemracing.es/descargas/

There are **6** Entry Class CAD models that can be downloaded to help you build your car. These are: **STEM Racing block, body 'no-go-zone', halo, helmet, standard wheel** and the **standard axle.**

5. Turn your ideas into a CAD drawing

Using the 3D parts listed above and any 3D CAD package that you have available, turn your freehand sketches into an accurate 3D CAD model using software provided by our partners AUTODESK and ANSYS.

6. Start making your car!

Make sure your design is fully legal before manufacturing your car. Decide how best to produce your car, using either a CNC router or a 3D printer, then **get cracking! Make use of the axel hole jig to aid your manufacture.**

7. Create a 5-page Design & Engineering Portfolio

The judges want to see a **5-page** Design & Engineering Portfolio on Race Day. This should show sketches, models, CAD work and testing to explain how you designed, developed and manufactured your car.

8. Create a 5-minute Verbal Presentation

As a team, you must put together a verbal (spoken) presentation that lasts no longer than 5 minutes. You can use a powerpoint presentation to help you along, but it's all about speaking directly to the judges!

9. Create a table-top display for your Team Pit Area

There will be an award for the best Team Pit Display on Race Day, so get creative to show off your team! Think about this like your team's shop front, maybe even with some small giveaway promotional items...

10. ROCK UP ON RACE DAY!

Attend your nearest STEM Racing event ready to compete!

ENTRY CLASS

What is STEM Racing? 04
Car Design 05
Assessment 16
The Competition 20
Appendix 29

What is STEM Racing?

Hello and welcome to STEM Racing!

I would like to give you a warm welcome to the challenge and hope you have fun working as a team to compete in this life-changing experience. There are awards and prizes up for grabs to all teams who compete. STEM Racing is open to all secondary schools, colleges and youth groups. The challenge is simply to design, make and race innovative F1 cars of the future, using a combination of design and make skills and CAD / CAM software

Entry Class is open to anyone between the ages of **11-19**, in teams of **3-6 members**. By choosing Entry class, you have given yourself the best possible chance of growing through the ranks to become one of the Cayman Islands' top teams. Our rules committee have created this document to give you all the information needed to compete in the Entry Class competition.
Best of luck, and we look forward to seeing you on Race Day!

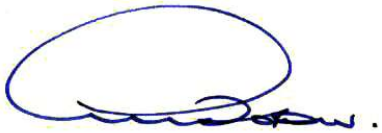

Andrew Denford
Founder and Chairman
STEM Racing (Formerly F1® in Schools)

CAR DESIGN

What is an Entry Class car? 06
What is the 'no-go-zone'? 07
Design Brief 08
Car Scrutineering 10

What is an Entry Class car?

Don't worry if you've never heard of 'side pods' or 'wingspan' before, the next few pages explain everything you need to know about designing your mini F1® racing car to meet the Entry Class rules. *Read through the following pages very carefully as a team!*

Your STEM Racing Entry Class car must have these features:

What is the car body?

The car body is the main bulk of your entry-class car. It is the middle section that the front and rear wings, halo, axles, axel guides and wheels are all attached to. Depending on how you make your car, this is manufactured from either the STEM Racing model block or any 3D printing material and must be manufactured according to the 'no-go-zone' *(don't worry – this is explained on the next page!).*

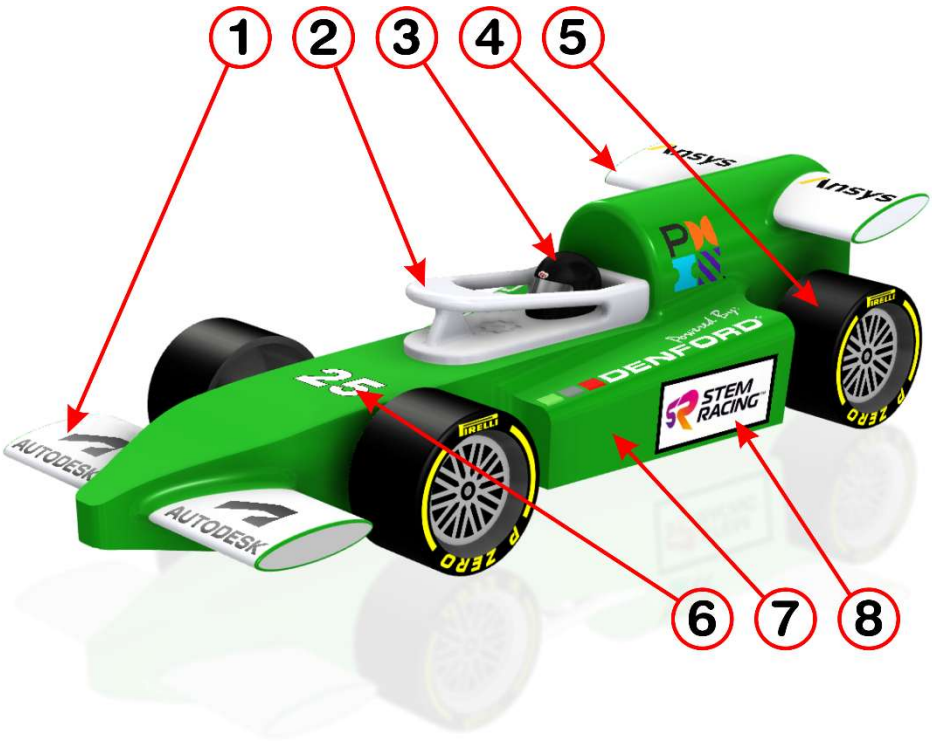

1. Front Wing
2. Official Halo
3. Official Helmet
4. Rear Wing
5. Standard Wheels and Axles
6. Team Number
7. Side Pods
8. STEM Racing Official Decal

Wing design explained:

- A **leading edge** is the edge of the wing that cuts through the air first.
- The **trailing edge** is the edge that the air touches last as it leaves the wing.
- Wing **span** is a bit like the arm span of a human, or the wing span of a bird or plane. It is the total width of the wings, including the nose cone or body of the car.
- Wing **chord** is the widest point of the wing's cross section, between the leading and trailing edges.
- Wing **thickness** is the deepest point of the wing across its cross section.

Wing cross-section diagram:

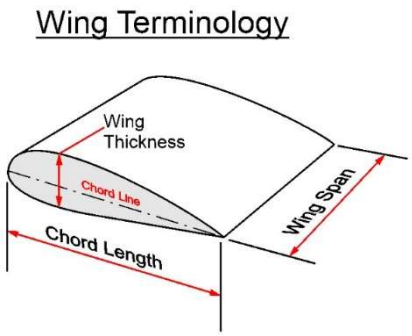

What is the 'no-go-zone'?

Entry Class cars **must be safe to race** down our 20m elevated racetrack, powered by a power unit cartridge. To ensure this, the STEM Racing rules committee has created a 'no-go-zone' that **car designers MUST use as a minimum** for the body of their car. Think of this like starting with a basic shape that you add to, to create the shape of your car.

The 'no-go-zone' has been carefully designed so you can still make your Entry Class car look like a real F1® racing car, so use all your imagination and styling ideas to make sure your car doesn't just look like the no-go-zone with some wheels stuck to it!

The 'no-go-zone':

Below is an illustration of the Entry Class no-go-zone, showing the minimum shape of your car body. It is a **PERFORMANCE** regulation that you don't cut or machine inside the no-go-zone, so make sure you measure and make your body carefully to avoid losing out on lots of points! The no-go-zone includes accurate axel holes to ensure the height of your Halo is correct for use with the Halo Deceleration System. Please do not move the location of the axel holes.

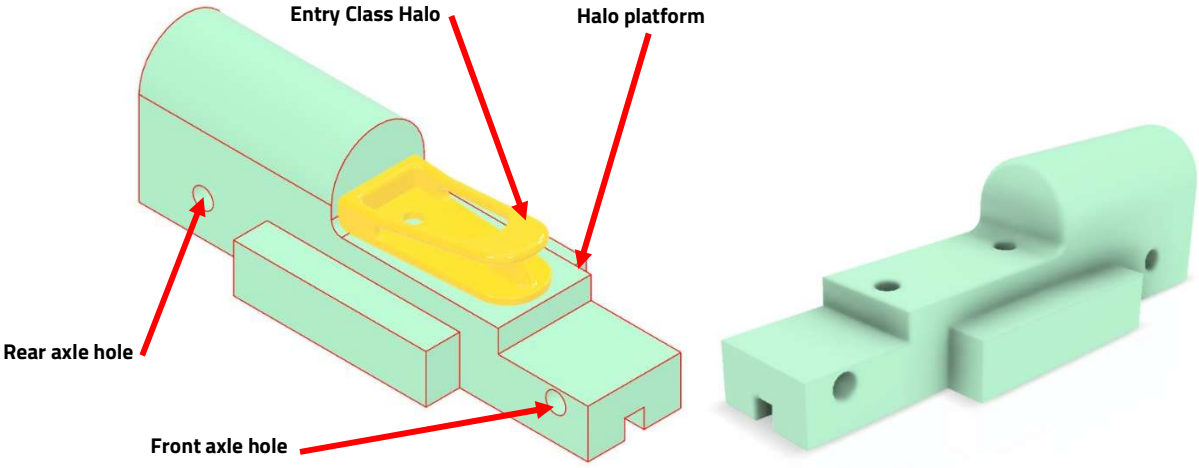

REMEMBER: After CNC machining or 3D printing, gently sanding your model can reduce the size of the no-go-zone underneath the minimum dimensions, so be extra careful to leave enough material and measure your car yourself to be sure it will pass all the 'Technical Regulations', which are explained on Page 9. *Full no-go-zone dimensions can be found at the back of this guidebook in Appendix ii.*

The Design Brief

Your task is to design, make and race a miniature F1® racing car, which will race down the STEM Racing 20m elevated racetrack, powered by a power unit cartridge. You must use a range of techniques to show design work, including freehand 3D sketches **and** 3D CAD development drawings.

The Car:

Your car must include the following features:

- F1® style body including side pods
- Front wing
- Rear wing
- **Halo + Helmet**
- Standard STEM Racing wheels, axles and axle guide tubes

Note: See 'Technical Regulations' (next page) for all body and wing dimensions

Body Manufacturing:

In Entry Class, there are **two** manufacturing options for your car body:

- **Option 1:** The car body can be manufactured using a 3D CAM router (such as the Denford Router) using the official STEM Racing model block
- **Option 2:** The car body can be manufactured entirely using a 3D printer using any 3D printing material, in one piece or as multiple parts. ***Please ensure you consider shrinkage when 3D printing your car, pay particular attention to the cylinder chamber dimension after manufacture. The 8G power pack cartridge MUST fit into your car or you will not be permitted to race at your regional final.***

Wing Manufacturing:

You can manufacture the front and rear wings of your car using any manufacturing method and material combination. Be creative but remember that the wings are usually the most fragile parts of the car!

Now turn over for a checklist of how to design your F1 in Schools Entry Class car…

Software: Autodesk & Ansys

To enhance your team's performance and ensure compliance with the Aramco STEM Racing World Finals Technical Regulations, we highly recommend utilizing **Autodesk and Ansys software.**

Autodesk provides powerful tools like Fusion 360 for 3D design and modelling, which are essential for creating innovative and competitive car designs. Ansys software, including Ansys Discovery, offers advanced simulation capabilities to optimize your car's aerodynamics and structural integrity.

Both software packages are available for free download and installation on our official website, https://stemracing.es/software/ Detailed instructions and tutorials are provided to help you get started and make the most of these industry-leading tools.

AUTODESK - https://www.autodesk.com/education/edu-software/fusion
Premier global cad/cfd partner

ANSYS - https://www.ansys.com/academic/students/ansys-student
Global cfd simulation partner

Technical Regulations:

Technical Regulations dictate how the car must be designed so it is suitable to compete. All regulations carry a points penalty, so double check your car is fully legal and ready to race BEFORE you arrive on race day! Here is an explanation of the different types of rules in STEM Racing and what they mean:

Regulation type:	Purpose:	Points:	Extra penalty:
GENERAL	Aesthetics of the car	5	None
SAFETY	Suitability to race	10-20	Car may require modification or not race
PERFORMANCE	How fast the car can travel	20	Unable to win Fastest / Best Eng. Car award

E1.1 Car body material - [SAFETY | 20pts]

E1.1.1 Make option 1: The car body MUST be manufactured using the official Model Block

E1.1.3 Make option 2: The car body can be manufactured from any 3D printing material

E1.2 No-Go-Zone - [PENALTY – 20PTS]

The car body must have a minimum size no less than the official Entry Class no-go-zone including two (2) axle holes. You **MUST** not compromise the No-Go-Zone during manufacture. Please refer to **Appendices i & ii** for more details.

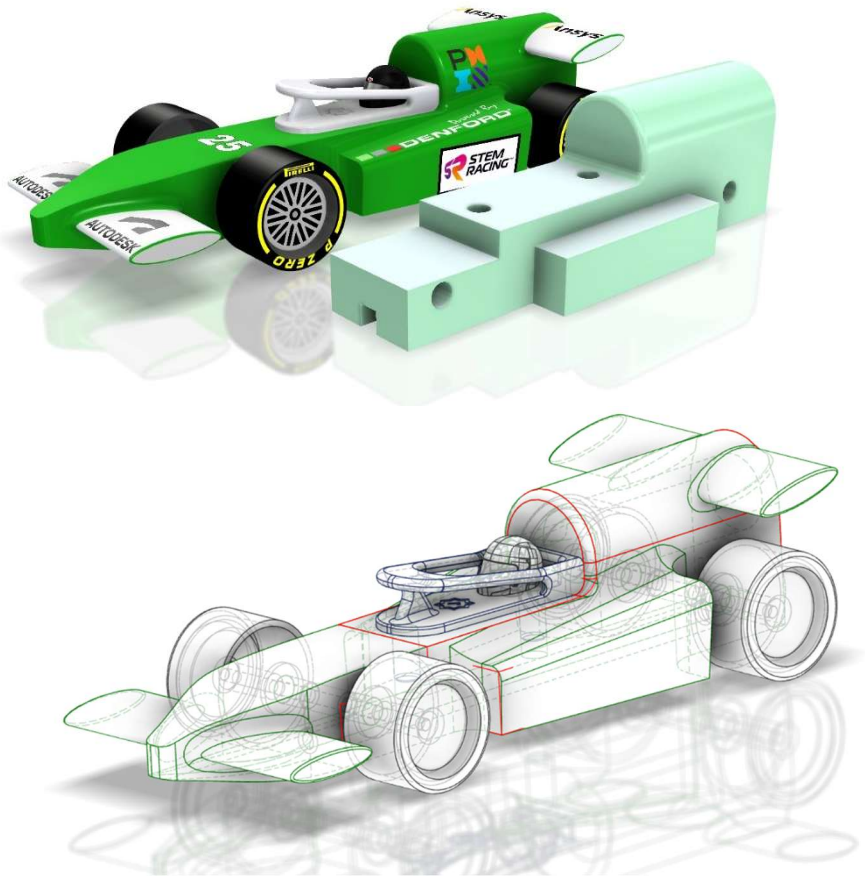

Example Car W/Entry Class No-Go-Zone highlighted in Red.

E1.2.1 Assembled Car Length - [PENALTY – 5PTS]

The assembled car length including body, front and rear wings, must be between the following dimensions:

Length - Min: 170mm – Max: 210mm

E1.2.2 Assembled Car Width - [PENALTY – 5PTS]

The assembled car width including body, wheels, front and rear wings, must be shorter than the following dimension:

Width - Max: 85mm

E1.2.3 Assembled Car Height - [PENALTY – 5PTS]

The assembled car Height including body, halo, front and rear wings, must be shorter than the following dimension:

Height - Max: 65mm

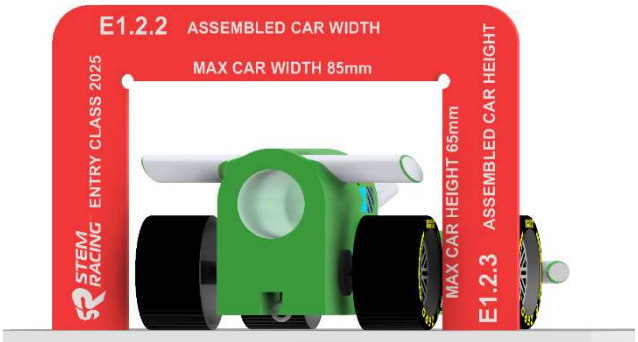

E1.3 Halo/Helmet - [PERFORMANCE | Penalty – 10 pts]

The Halo/Helmet MUST be included in the car design without any dimensional changes. The file can be downloaded from WEBSITE Spain/downloads. Please see appendix iii for detailed dimensions. Please Note:

The Halo/Helmet file for entry class teams is different to that of the development and professional classes. Entry Class teams **MUST** use the correct Halo.

E1.3.1 Halo Circular Notch Height - [SAFETY | 10pts]

To be effective the centre of the Circular Notch must be 34.0mm (±1.0mm) above the track surface. To achieve this the **NEW Entry Class No-Go-Zone MUST** be used with no modification to the axel holes and Halo Bed.

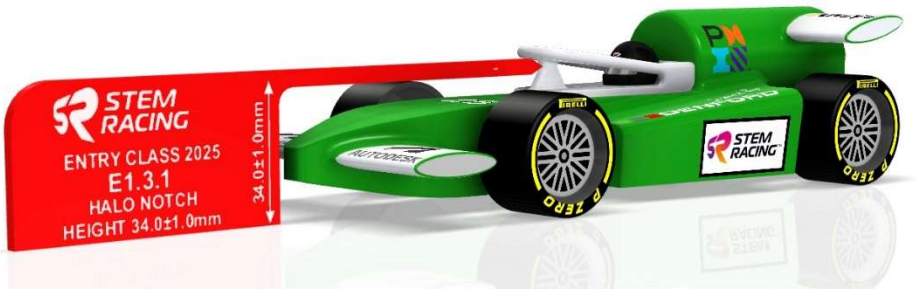

E1.3.2 Halo visibility front, side and plan views – [GENERAL | Penalty – 5 pts]

Visibility of the Halo must not be physically obstructed by any other component when viewed in the front, side or plan views.

E1.3.2 Halo and Helmet Visibility

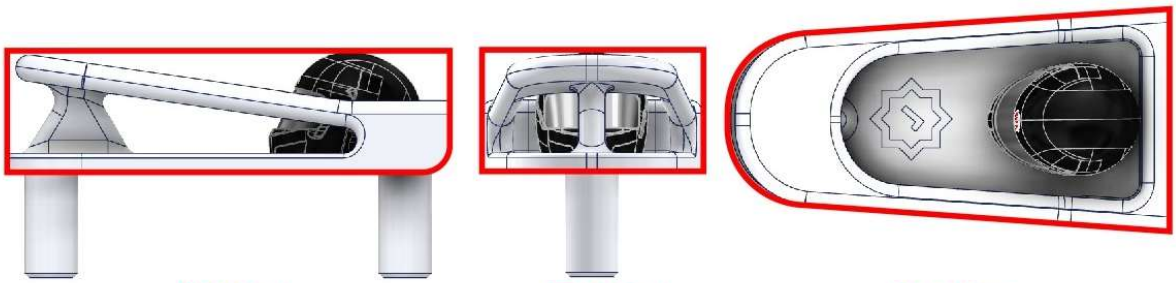

Side View
When viewed from the side, everything inside the red outline **must** be visible.

Front View
When viewed from the front, everything inside the red outline **must** be visible.

Plan View
When viewed from the top, everything inside the red outline **must** be visible.

E1.3.3 Halo Safety Test– [SAFETY | Penalty – 5pts]

With the car supported on a power unit cartridge a 1kg load will be suspended to give a loading of 2kg (to be reviewed) at point of contact on the Halo circular notch.

E1.4 Front wing - [GENERAL]

The front wing must be securely fixed to the body of the car, either as a single piece or as part of a nose cone assembly. The front wing can be manufactured using any suitable material.

E1.4.1 Front wing thickness:

Min: 3mm / Max: 15mm [Penalty – 5 pts]

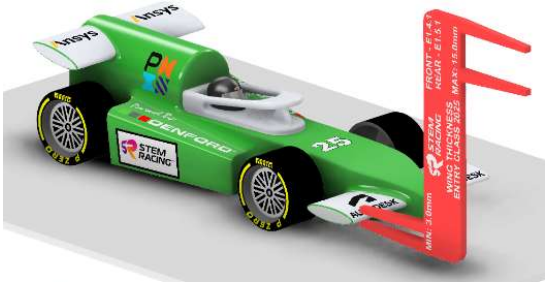

E1.4.2 Front wing span:

Min: 60mm / Max: 80mm [Penalty – 5 pts]

E1.4.3 Front wing chord:

Min:12mm / Max: 25mm [Penalty – 5 pts]

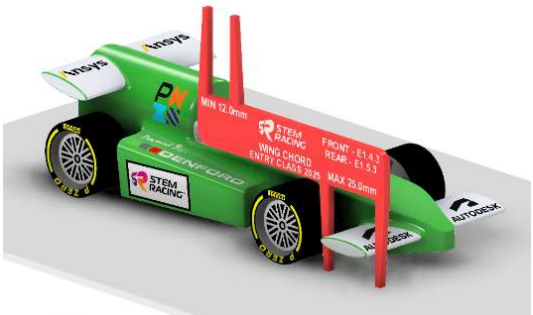

E1.5 Rear wing - [GENERAL | 5pts]

Rear wings must be securely fixed to the body of the car, either as a single piece or as separate elements that make up the total wing span when measured as part of the finished car.

E1.5.1 Rear wing thickness:

Min: 3mm / Max: 15mm [Penalty – 5 pts]

E1.5.2 Rear wing span:

Min: 60mm / Max: 80mm [Penalty – 5 pts]

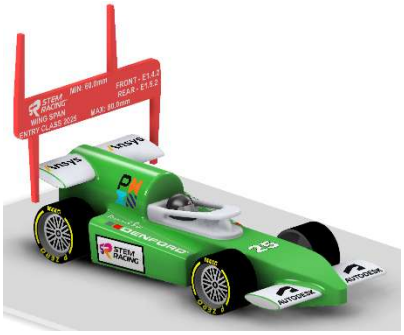

E1.5. 3 Rear wing chord:

Min:12mm / Max: 25mm [Penalty – 5 pts]

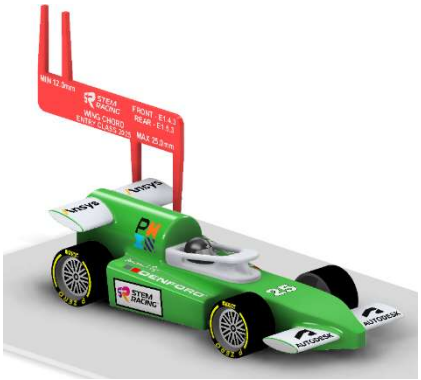

E1.6 Wheels - [GENERAL | 5pts]

Entry Class cars **MUST** use the STEM Racing standard wheel, unmodified in any way. Please refer to **Appendix iii** for more details. (Included in the F1® Entry Class starter kit) **Please note Pirelli stickers are optional.**

E1.7 Axles - [GENERAL | 5pts]

Entry Class cars **MUST** use two (2) standard axles and axle bushes, modified only in length within the dimensions below. Please refer to **Appendix iv** for more details. (Included in the F1® Entry Class starter kit)

Min: 50mm / Max: 66mm

E1.8 Tether line guides - [SAFETY | 10pts]

Entry Class cars **MUST** use two (2) standard tether line guide screw eyes (included in the STEM Racing Entry Class starter kit), secured safely into the underside of the car body. Tether guide screw eyes must be unmodified.

E1.9 Total car weight - [PERFORMANCE | 20pts]

This is the minimum weight the finished car must be to race, including wheels, axles, paint and any decals.

Min: 65g

ASSESSMENT

✓ This symbol means competition points will be awarded

Design & Engineering Portfolio: 17

Verbal Presentation: 18

Pit Display (award only): 19

Design & Engineering

You must produce a **printed** (or 'hard-copy') **5-page** Design & Engineering Portfolio to show to the judges on Race Day, explaining how you designed, tested and made your F1 in Schools racing car. Below is a checklist of suggestions for what to include in your Design & Engineering Portfolio.

Content:

Your Design & Engineering Portfolio should contain evidence of the following:

- **Initial ideas** – including 3D freehand sketches
- **Design development** – including images of any models, CAD work and testing
- **Testing** – showing / explaining how you tested your car, what you found out and what you then changed
- **Manufacturing** – including photos and descriptions of how you made and assembled the parts of your race car
- **Brand Identity** – Including team name, logo, car livery (colour scheme and patterns) and your team spirit!

Format:

The format of your Design & Engineering Portfolio is up to you, choose between either:

- **A4** – landscape or portrait
- **A3** – landscape or portrait

Note: Please make sure your Design & Engineering Portfolio is printed and presented in full colour and stapled or bound.

Additional Information:

You may choose to include the following sections, which do NOT count towards your 5-page limit:

- Decorative front cover
- Contents page

Note: You MUST clearly display your team name on the front page of your Design & Engineering Portfolio. Your Portfolio must be clearly displayed at your Pit Area on the morning of Race Day.

Verbal Presentation

You must prepare a **5-minute** verbal presentation to deliver to the judges on Race Day, explaining how you got to where you are today and all the things you've learned so far in your STEM Racing Cayman Islands journey. You may also produce an electronic presentation to accompany your verbal presentation if you wish.

Content:

Your verbal presentation is your chance to tell the judges your story! It is completely up to you how you structure your presentation, but here are some suggestions to help make you stand out!

- Tell the judges why you got involved in STEM Racing Cayman Islands
- Describe what you found the most enjoyable and the most difficult – the judges appreciate honesty!
- Who did what, how you planned your time and how you think it turned out (good and bad!)
- Describe any collaborations (partnerships) you formed to help you through the project
- Explain what you've learned, both individually and as a team, including any new skills you've gained

Style:

There are NO rules about how to deliver your verbal presentation; do it stood on your head, sing the judges a song, act it out like a school play. Just do what feels most comfortable to you. All we ask is that:

- **Everyone takes part!** – make sure every member of the team has a speaking part
- **You don't go over 5 minutes** – the judges need to ask you questions so no waffling!

Research Mission:

The judges will be asking you some questions to see what you have learned during your day at the Entry Class Regional Final. These questions will be given to you on Race Day so be prepared to get investigating!

Note: Any electronic presentations MUST be saved to a memory stick. Please also bring a laptop with a HDMI port/connection to run these presentations on, as we cannot provide one for you!

Team Pit Display

(AWARD ONLY)

Each team is given a 'Pit Area' including a table on Race Day. This will become your base for the day and is the perfect space to create a team display. This is not assessed as part of the competition, but the judges are keeping their eyes peeled to give an award to the best display on the day. Make sure you stand out!

Content:

The Team Pit Display is your opportunity to share all your design work, models and prototypes, creating an attractive area that teams and judges will want to come and look at. The Pit Display can be made up of several elements, so here are some suggestions to help make you stand out!

- Show a range of 'behind the scenes' design work, not just your Design & Engineering Portfolio.
- Make sure it's clear whose Pit Display it is – add your team logo and colours to make it obvious.
- Judges love cupcakes. In fact, most people love a freebie, so why not bring something to give away?
- Give it height! To make it visually appealing, having raised items helps create a better look.

Remember there is **no scorecard** for the Team Pit Display, just an award for the Best Team Pit Display, so have some fun with it! The judges will be looking for interesting and engaging displays, so have a think about what you could bring along with you. When you compete in the Development and Professional classes, the Pit Display is assessed as part of the competition, so get some ideas and make sure you find out what makes a really impressive Pit Display for next year.

THE COMPETITION

How it works – Race Day 21
How it works – Judging 22
Judging Score cards 23
Next Steps – Development Class 27

Race Day – What to Expect

Race Day happens at your nearest SPAIN Regional Final, which brings together all three classes of the STEM Racing Spain family. You'll be sharing the track and pit area with Development and Professional Class teams, but don't worry – you'll only be competing against other Entry Class teams from your area! This is your chance to check out the competition and ask the Development and Professional Class teams about the next stages of the competition.

Registration & Car Scrutineering

- When you arrive you'll register with us, where you'll be given some important information including your judging timetable. Then, you must take your car immediately to our Scrutineering area, where our judges make sure your car will be ready to race. **Make sure your car is ready to hand in when you arrive!**

Welcome Presentation

- After a short set-up period to get your display table set up, we will hold the official welcome and explain the format of the day. Get ready to wave your arms in the air and cheer as your team name is called out!

Judging: Design & Engineering Portfolio

- Our team of expert judges will look through your portfolio with you. This is a great chance to speak to the judges informally and explain everything you've done and what you've learned!

Judging: Verbal Presentation

- Your team will deliver a 5 minute verbal presentation to our judges, explaining what you have done to get here. The judges will then ask a series of questions related to your research mission, crucially the judges will want to know what you'll do differently when you come back as a Development Class team next year...

RACE!

- You will go head-to-head with another Entry Class team to compete for the top spot on our leaderboard. Racing will consist of 2 timed runs in each lane of the 20m STEM Racing Cayman Islands elevated race track.

Judges Debrief & Awards Ceremony

- After all the judging has been completed, the team of judges will gather to discuss their scores and work out who will go home from Race Day with our various awards. Awards will be handed out to teams in all three classes, including the prestigious **Entry Class Regional Champions** award. Fingers crossed!
  - **Entry Class awards:** **Fastest Car, Best Engineered Car**
  - **Entry Class top prize:** **Entry Class Regional Champions**

The Judges – what they're looking for:

The judges will have a total of 555 points to give you throughout the day and will score your work in four areas: Car Scrutineering, Design & Engineering Portfolio, Verbal Presentation and Racing.
Below is a quick guide explaining how the judges score your work, on the next pages are the official Entry Class score cards so you can see exactly what the judges are looking for!
The STEM Racing Entry Class Regional Champions trophy will be awarded to the team with the highest total score, sum of all judging categories (see below). In the case of a tied points score, the team with the highest racing score will be determined the winner.

Car Scrutineering

- Your car will be assessed and hopefully declared safe to race by our judges, who will check your car against the Technical Regulations on Page 9. Car Scrutineering will be scored using the scorecard on page 18.
- **Total points available for Car Scrutineering: 175**

Design & Engineering

- Your Design & Engineering Portfolio and Brand Identity will be assessed by the judges and given a score based on a number of criteria, as described on page 12. Portfolios will be scored using the scorecard on page 19.
- **Total points available for Design & Engineering: 140**

Verbal Presentation / Research Mission

- The judges will listen to your 5 minute presentation, then ask questions related to your Research Mission based on the criteria on page 13. Verbal presentations will be scored using the scorecard on page 20.
- **Total points available for Verbal Presentation: 140**

Racing

- You will be awarded racing points depending on how you perform on track. Points will be awarded for your reaction time, the time your car takes to complete the track and the combined 'total race time'.
- **Total points available for Racing: 100**

Now have a look at the judging scorecards to see exactly what the judges will be awarding points for when they meet you on Race Day…

Car Scrutineering Scorecard

Team Number:
Team Name:
School:

Specifications					
Regulation	**Summary**	**Criteria**	**Points available**	**Pass/Fail**	**Score**
E1.1	Body material (award points for one ONLY)	**E1.1.1**: CNC Model block	20		
		E1.1.2: 3D printed body	20		
E1.2	No-Go-Zone	Compromised	20		
E1.2.1	Assembled Car Length	Min: 170mm Max: 210mm	5		
E1.2.2	Assembled Car Width	Max: 85mm	5		
E1.2.3	Assembled Car Height	Max: 65mm	5		
E1.3	Halo	Entry Class Halo W/Spigot Used	10		
E1.3.1	Halo Circular Notch Height	34.0mm (±1.0mm) Above Track Surface	10		
E1.3.2	Halo Visibility front/side/plan view	No physical obstruction in the front/side/plan view	5		
E1.3.3	Halo Safety Test	Halo can withstand 2KG load	5		
E1.4.1	Front wing thickness	Min: 3mm Max: 15mm	5		
E1.4.2	Front wingspan	Min: 60mm Max: 80mm	5		
E1.4.3	Front wing chord	Min: 12mm Max: 25mm	5		
E1.5.1	Rear wing thickness	Min: 3mm Max: 15mm	5		
E1.5.2	Rear wingspan	Min: 60mm Max: 80mm	5		
E1.5.3	Rear wing chord	Min: 12mm Max: 25mm	5		
E1.6	Wheels	Standard wheels	5		
E1.7	Axles	Standard axles and axle guide tubes	5		
E1.8	Tether line guides	Standard guides	10		
E1.9	Weight	Min: 65g	20		
				Specifications Total	**/155**

Aesthetics				
F1® style body	Few recognisable F1® design features	Attempt to create F1® style body with most features present	Highly recognisable F1® style body design, including side pods, front and rear wing and nose cone	
	1 2 3	4 5 6 7	8 9 10	
Quality of Finish and Assembly	Reasonable finish with some inconsistencies	Good overall finish quality and assembly with attention to details	High level of accuracy shown on all manufactured components. High attention to detail across all assembly and finishing	
	1 2 3	4 5 6 7	8 9 10	
			Aesthetics Total	**/20**
			Specifications Total + Aesthetics Total = Car Scrutineering Total =	**/175**

Notes:

Design & Engineering Scorecard

Team Number:
Team Name:
School:

Design & Engineering Portfolio				
Initial Ideas	Few rough ideas of value, limited techniques used to convey basic designs	Good range of initial ideas to show different possible solutions. Clear annotation of ideas justifying design decisions	Comprehensive range of ideas, including freehand 3D sketches and test modelling to show possible solutions. All designs clearly annotated with design justifications	
	1 2 3 4	5 6 7 8 9 10 11	12 13 14 15 16 17 18 19 20	
Design Development	Limited progress made from initial ideas, some basic details describing final design	Evidence of design developments made between initial idea and final design, using appropriate techniques with clear justification	Clear and logical design development, showing stages of development from initial idea selection to final design, using a wide range of techniques. All decisions justified	
	1 2 3 4	5 6 7 8 9 10 11	12 13 14 15 16 17 18 19 20	
Testing	Limited use of basic testing techniques	Logical testing undertaken, providing some useful data or conclusions. Some linked suggestions for improvements.	Appropriate and thorough testing conducted, providing valuable results. Results analysed and used to inform justified design development process with clear conclusions	
	1 2 3 4	5 6 7 8 9 10 11	12 13 14 15 16 17 18 19 20	
Manufacturing	Little manufacturing details	Some manufacturing processes described and issues presented	Detailed assessment of manufacturing processes, stages, materials & issues encountered with signs of evaluation	
	1 2 3 4	5 6 7 8 9 10 11	12 13 14 15 16 17 18 19 20	
Document Presentation	Difficult to follow with basic presentation	Document clearly structured and well organised	Document has high impact and professional throughout. Consistent and clear organisation	
	1 2 3 4	5 6 7 8 9 10 11	12 13 14 15 16 17 18 19 20	
			Design & Engineering Portfolio Total	**/100**

Brand Identity				
Team Identity	Limited consideration given to establishing a team identity	Some consideration given to choosing an appropriate team name, motto and organisational style	Excellent and highly effective team name, trademark and operating style. Clear buy-in from all members who demonstrate genuine team spirit	
	1 2 3 4	5 6 7 8 9 10 11	12 13 14 15 16 17 18 19 20	
Graphic Identity	Inconsistent, limited or obscure graphic identity	Effective graphic identity consistent through various project elements e.g. car matches team uniform	Excellent and highly effective graphic identity, in line with the team identity. Graphics neatly and consistently applied through all project elements.	
	1 2 3 4	5 6 7 8 9 10 11	12 13 14 15 16 17 18 19 20	
			Brand Identity Total	**/40**

Design & Engineering Portfolio Total + Brand Identity Total = Design & Engineering Total =	**/140**

Notes:

Verbal Presentation Scorecard

Team Number:
Team Name:
School:

Technique				
Team Contribution	Minimal team participation	Good contributions from most team members	Excellent teamwork with all members participating effectively	
	1 2 3 4	5 6 7 8 9 10 11	12 13 14 15 16 17 18 19 20	
Energy and Engagement	Artificial and/or low energy, minimal audience engagement	Speakers generally enthusiastic with lively delivery, some audience connection at times	Passionate with effective and appropriate levels of liveliness, audience fully engaged and excited throughout presentation	
	1 2 3 4	5 6 7 8 9 10 11	12 13 14 15 16 17 18 19 20	
Time / Presentation	Too fast or ran out of time. No structure presented	Good timing. Balanced topic depth and pace. A basic structure / outline provided and could be followed by audience	Ran on time or under. Excellent balance of depth for each topic. Clear presentation outline / overview. Excellent connections between topics and easy for audience to follow	
	1 2 3 4	5 6 7 8 9 10 11	12 13 14 15 16 17 18 19 20	
			Technique Total	**/60**

Content				
Project Management	Little evidence of planning or reflection	Planning and evaluation limited to short sentences with some justification, some ideas for improvements	Well planned with clear roles. Justified evaluation, clearly describing strengths and difficulties experienced. Justified suggestions for improvements	
	1 2 3 4	5 6 7 8 9 10 11	12 13 14 15 16 17 18 19 20	
Collaboration	Little collaboration	Links with industry or higher education described	Collaborations with industry and/or higher education explained and justified with learning and project outcomes	
	1 2 3 4	5 6 7 8 9 10 11	12 13 14 15 16 17 18 19 20	
Learning Experiences	No real reflections discussed	Good explanation of some learning outcomes	Clear reflection of a range of personal, lifelong learning and career skills, linked to project and future aspirations	
	1 2 3 4	5 6 7 8 9 10 11	12 13 14 15 16 17 18 19 20	
			Content Total	**/60**

Research Mission				
Key Questions	Lack of knowledge of Key Questions	Some Key Questions understood and answered cohesively	Most Key Questions answered with confidence, able to expand on questions when prompted	
	1 2 3	4 5 6 7	8 9 10	
Reflective Questions	Lack of discussion around Reflective Questions	Some Reflective Questions discussed thoughtfully	Most Reflective Questions discussed with confidence. Key skills recognised and identified demonstrating strong evaluative skills	
	1 2 3	4 5 6 7	8 9 10	
			Research Mission Total	**/20**

Technique Total + Content Total + Research Mission Total = Verbal Presentation Total =	**/140**

Notes:

26 2025/26 2025/26 2025/26
MENT DEVELOPMENT DEVE
AL TECHNICAL TECHNICAL TE
IONS REGULATIONS REGULA

NEXT STEPS

STEM RACING™ SPAIN

Next steps: Development & Professional Class

Entry Class is your first step on what could be the journey of a lifetime. With STEM Racing, you could travel the world as one of our World Finalist teams, meeting real F1® team members and drivers. This could be your chance to land the job of your dreams!

Looking ahead and understanding what comes next is crucial if you want to be among the world's top teams. In Development Class, some aspects will be familiar, while others will be more complex. Start reviewing the rules and regulations for Development Class and aim to return next year, challenging for a place at our STEM Racing Spain National Finals!

Additionally, if your dream is to compete in the STEM Racing World Finals, consider the Professional Class. Work hard because nothing is impossible.

More information will be available soon about the classes to enter in 2026.

#RoadToNationals starts here...

APPENDIX

Appendix i:	Official Model Block	30
Appendix ii:	No-go-zone	31
Appendix iii:	Standard Halo	32
Appendix iv:	Standard Wheels	33
Appendix v:	Standard Axles	34
Appendix vi:	Tether Guide Safety	34
Appendix vii:	Entry Class Gauges	35
Appendix viii:	Essentials Checklist	36

Appendix i. Official Model Block

This component is available to download a FREE 3D part from the STEM Racing website. For this part and more, please visit https://stemracing.es/descargas/

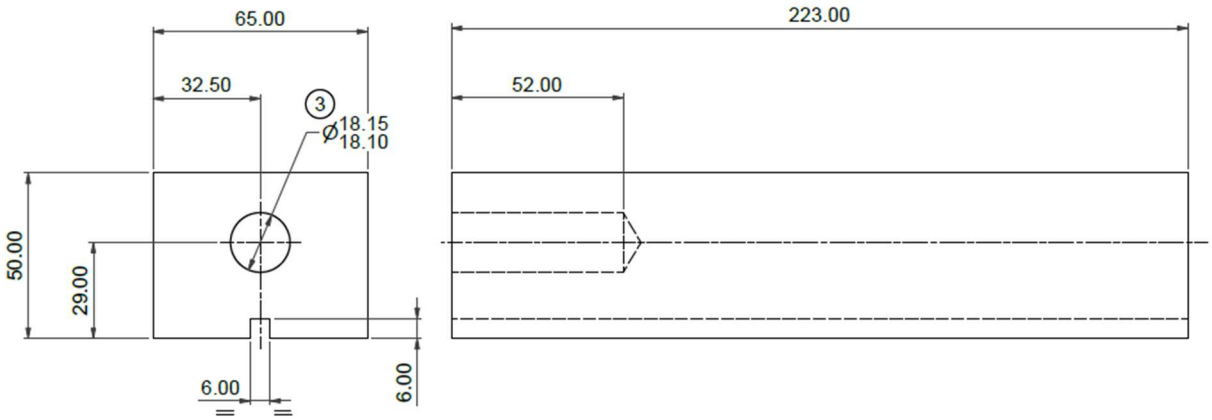

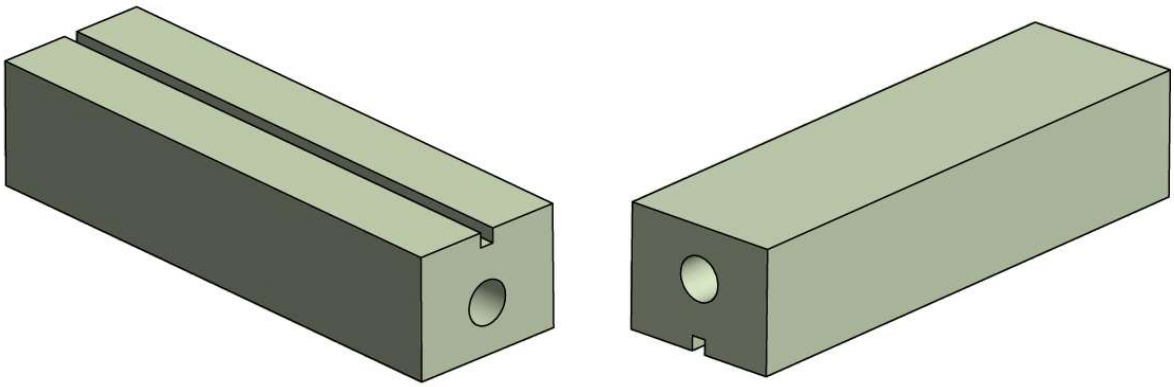

Appendix ii. Entry Class 'no-go-zone'

This component is available to download as a FREE 3D part from the STEM Racing website. For this part and more, please visit https://stemracing.es/descargas/

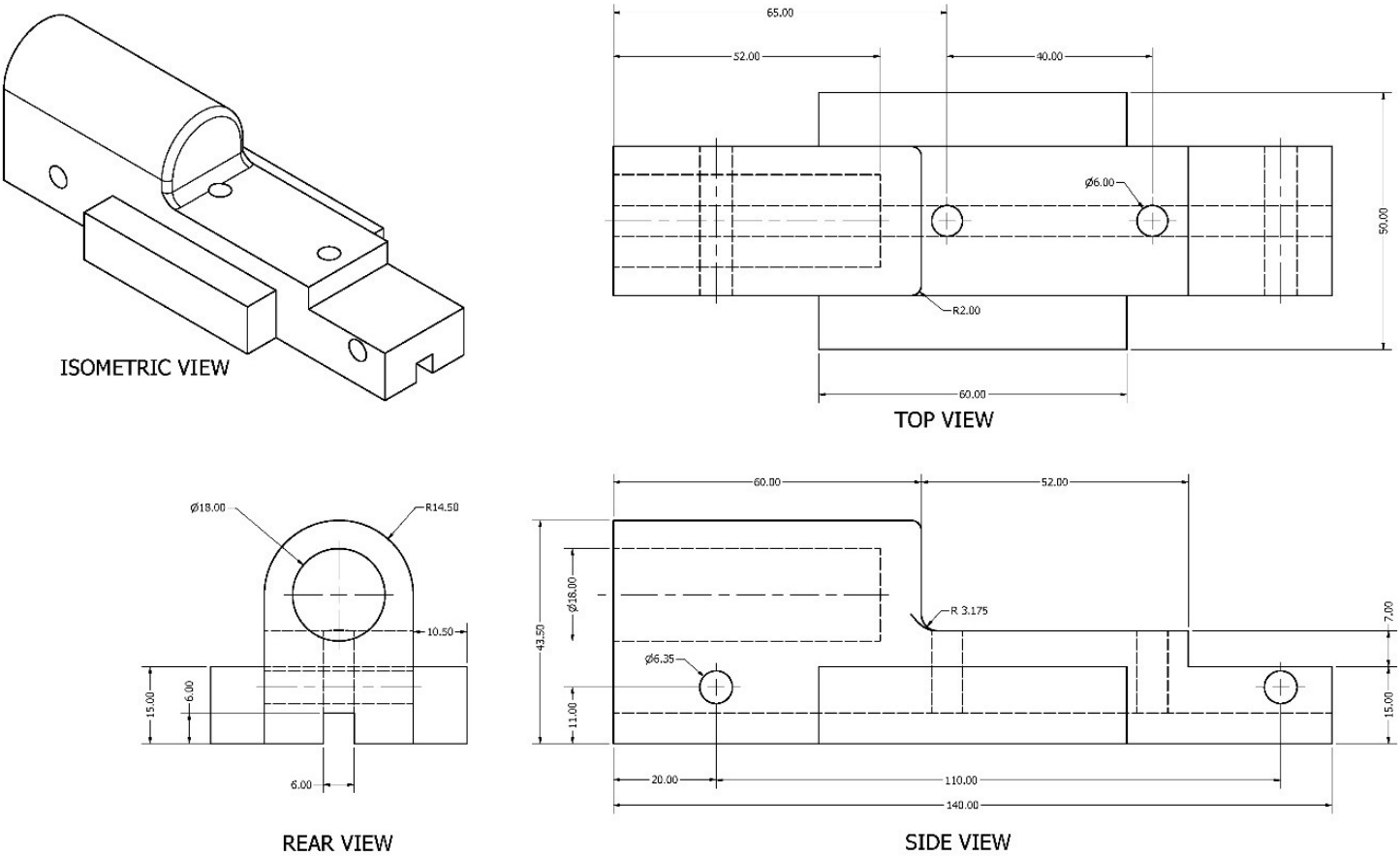

Orthographic projection:

Note: See how to sketch the no-go-zone and quickly start designing, by watching our tutorial on the STEM Racing Spain website. Just visit our **Downloads and Resources** section to see how!

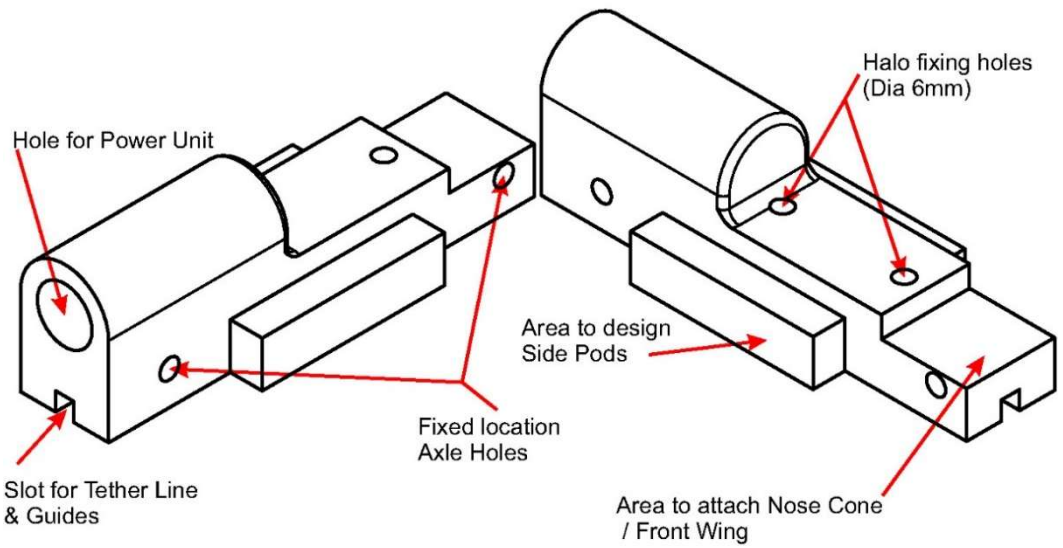

Appendix iii. Entry Class Halo

This component is available to download as a FREE 3D part from the STEM Racing Spain website. For this part and more, please visit https://stemracing.es/descargas/

Tip: To ensure you properly align your halo on top of the 'No-Go-Zone' platform, **download** and use the halo spigot hole jig. The jig aligns perfectly with the official STEM Racing Model Block, and we advise that you predrill (using a 6mm drill bit) your halo spigot holes prior to CNC machining your car body. Just visit our **Downloads and Resources** section to download the jig!

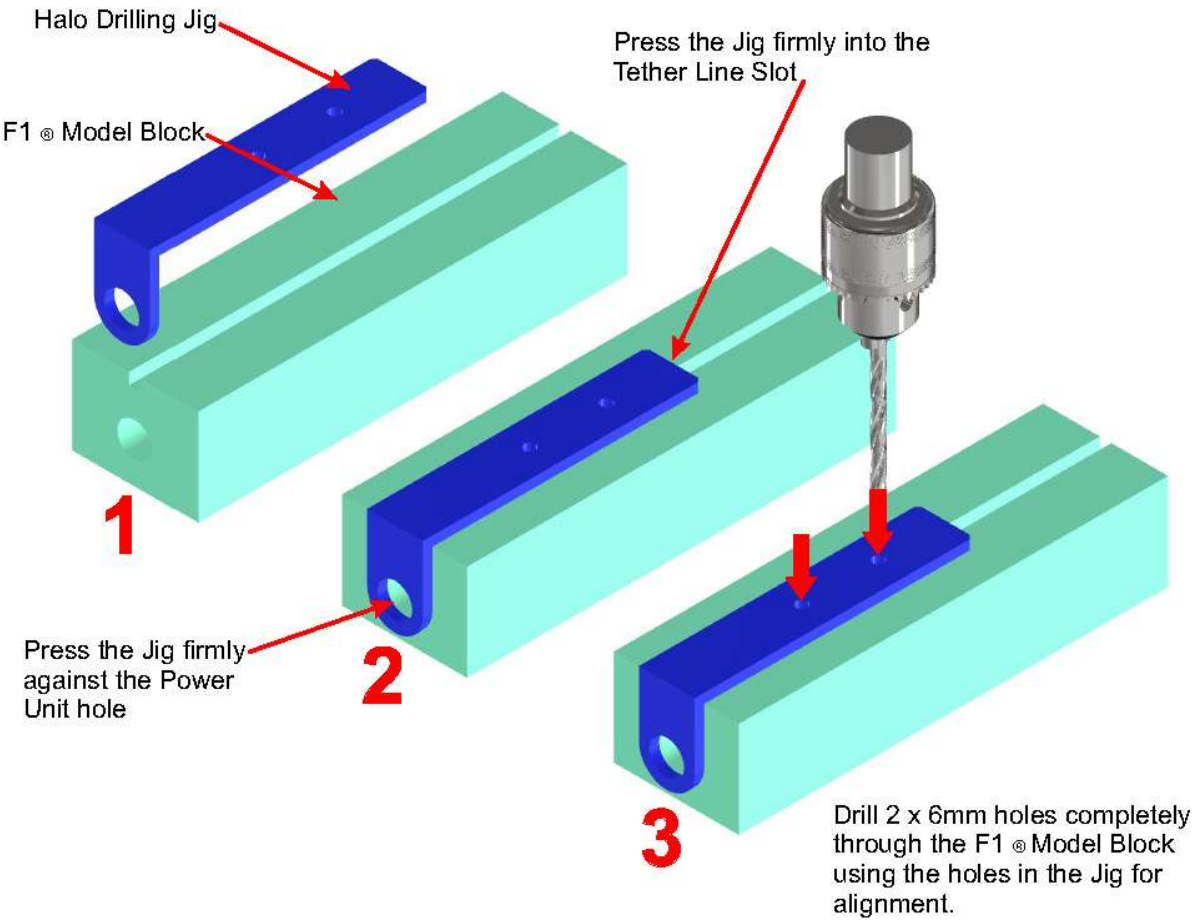

Appendix iv. STEM Racing Standard Wheel

This component is available to download as a FREE 3D part from the STEM Racing Spain website. For this part and more, please visit https://stemracing.es/descargas/

Please note this file is for assembly purposes on CAD and wheels should not be 3D printed for your physical car submission.

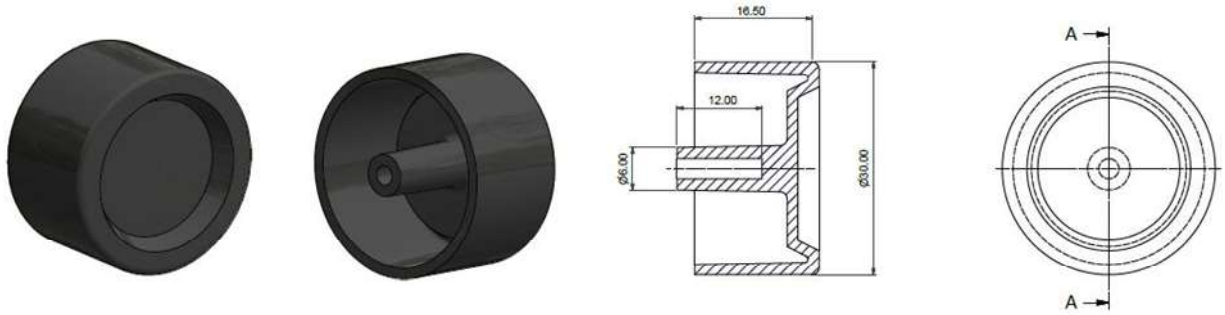

Individual wheel weight: 3.5-3.8g

Appendix v. Entry Class Standard Axle

This component is available to download as a FREE 3D part from the STEM Racing website. For this part and more, please visit https://stemracing.es/descargas/

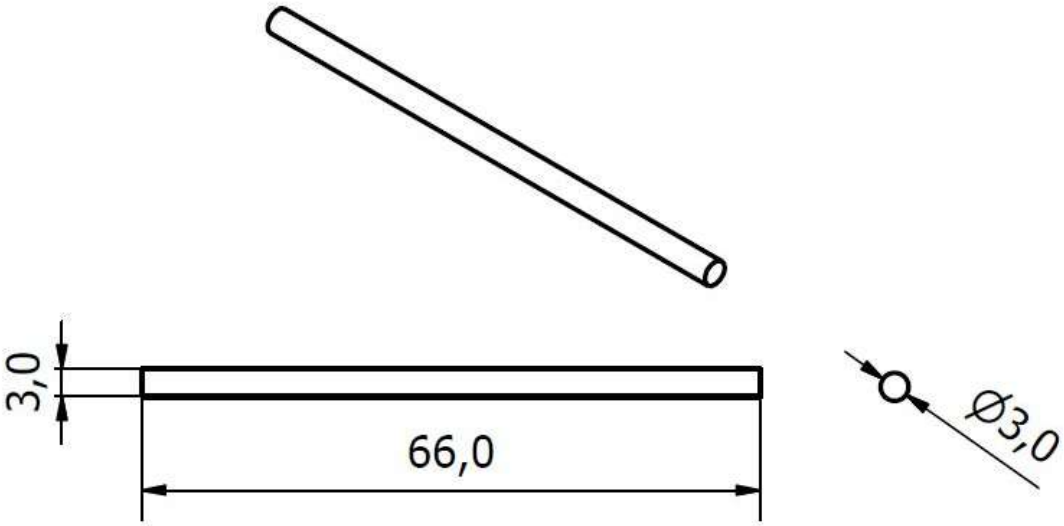

Individual axle weight: 4.0g

Appendix vi. Tether Line Guide Safety Test

The Tether Line Guide Safety Test is recommended for all teams to ensure that your tether line guides are safely in place and your car is safe to race on track. This test replicates what the scrutineer will do at your regional final.

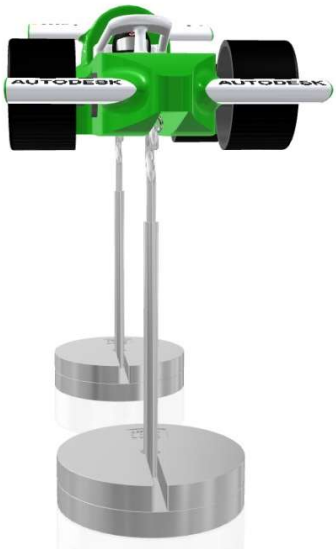

Appendix vii. Entry Class Scrutineering Gauges

The followings images are a to support with using the new Entry Class scrutineering gauges. The gauges are available to download for FREE as a DXF/Illustrator file for you to laser cut and use to check your car(s). These gauges are for a quick visual check for the relevant regulation, please use proper measuring equipment for accurate dimensions E.G. Digital Callipers.

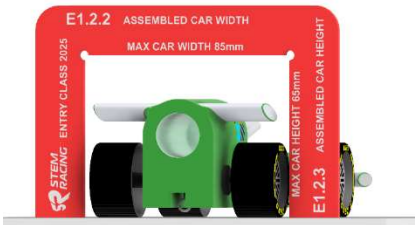

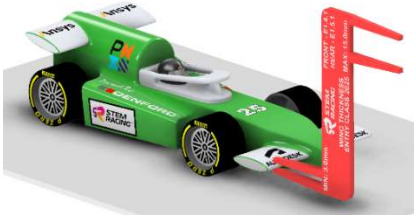

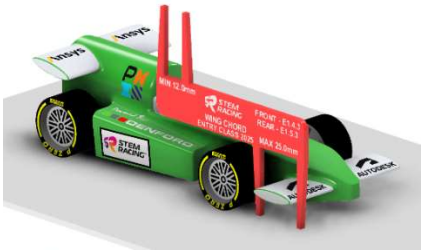

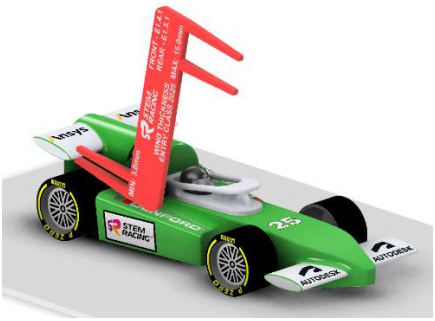

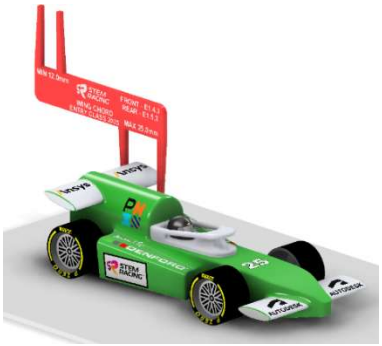

Appendix viii. Essentials Checklist

Below is a helpful checklist, showing some of the essential items you'll need for designing, making and competing in the STEM Racing Entry Class:

Essential workshop kit:	(TICK)
Tools / equipment:	
CNC router, laser cutter OR 3D printer	
STEM Racing Halo Spigot Jig	
Glass paper	
Materials:	
Modelling foam / spare F1® Model Blocks for practice / testing	
PLA / ABS reels for 3D printing	
Paint & lacquer (suitable for school use)	
Standard parts:	
Standard wheels	
Standard halo	
Standard helmet	
Standard axles and washers	
Standard tether line guides	
STEM Racing Official Model Block	
Race Day essentials:	
Assessment items:	
1 x Entry Class STEM Racing Car	
1 x 5-page Design & Engineering Portfolio	
1 x Computer to run visual slides for Verbal presentation (if required)	
1 x Tabletop display for your team's pit area (optional)	
Tools / equipment:	
Superglue	
Gaffer tape	
Blu-tack	
Extras / consumables:	
Food / drink	
Basic first aid kit	

Good luck,
see you soon

If you need any help at all, just get in touch with us:
STEM Racing Spain

INSERT CONTACTS:

contacto@stemracing.es

stemracing@madcup.es

+34 647 934 597