2025/26 DEVELOPMENT TECHNICAL REGULATIONS

STEM RACING™
SPAIN

Welcome to STEM Racing Development Class!

Welcome to the STEM Racing Development Class, the proving ground of the world's leading STEM competition! Development Class is where we uncover the National and World Champions of the future. Development Class teams meet first at the Spain Regional Finals, competing for a place at the Spain National Finals. Here, teams battle for the chance to be crowned Spain Development Class National Champions.

By choosing to enter this class, you're about to go head-to-head with some of the best emerging teams in the Spain, so make sure you read this document carefully. **The teams who understand the rules most clearly will have the best chance to create a winning car!** We want teams to show creativity and risk taking in their designs; this is how the fastest cars and the most unique ideas are born. Playing safe will never get you to the front of the grid, or the top step of the podium!

Please use this document alongside the corresponding STEM Racing Spain Competition Regulations.

CONTENTS (click on the titles to go straight to individual pages)

WELCOME TO STEM RACING DEVELOPMENT CLASS! 2

CONTENTS (CLICK ON THE TITLES TO GO STRAIGHT TO INDIVIDUAL PAGES) 3

RULE REVISIONS FROM THE PREVIOUS SEASON 5

HOW TO USE THE TECHNICAL REGULATIONS BOOKLET 6

THE BRIGHT RED CAR 6

WHAT TO DO NEXT: 6

ARTICLE D1 – DEFINITIONS (A USEFUL GLOSSARY OF TERMS) 8

D1.1 STEM RACING CAR 8

D1.2 FULLY ASSEMBLED CAR 9

D1.3 BODY 9

D1.4 OFFICIAL F1® MODEL BLOCK 9

D1.5 'NO-GO-ZONE' 9

D1.6 HALO 9

D1.7 POWER UNIT CARTRIDGE CHAMBER 10

D1.8 WHEELS 10

D1.9 AXLES 10

D1.10 TETHER LINE GUIDES 10

D1.11 FRONT / REAR WING ASSEMBLY 10

D1.12 SURFACE FINISH AND DECALS 11

D1.13 HAND FINISHING 11

D1.14 STEM RACING® LOGO DECALS 11

D1.15 ENGINEERING DRAWINGS 11

D1.16 RENDERINGS 12

D1.17 VERTICAL REFERENCE PLANE 12

D1.18 NORMAL 12

D1.19 ADDITIONAL COMPONENTS 12

D1.20 FULL 8 GRAM POWER UNIT CARTRIDGE 12

ARTICLE D2 – GENERAL PRINCIPLES *(THE SMALL PRINT!)* 13

D2.1 REGULATIONS DOCUMENTS 13

D2.2 INTERPRETATION OF THE REGULATIONS 13

D2.3 AMENDMENTS TO THE REGULATIONS 13

D2.4 CLASSIFICATION OF REGULATIONS 13

D2.5 COMPLIANCE WITH REGULATIONS 13

D2.6 DESIGN IDEAS AND REGULATION COMPLIANCE QUESTIONS 14

D2.7 MEASUREMENTS 14

D2.8 BENEFIT OF DOUBT 14

D2.9 SPIRIT OF THE COMPETITION 14

D2.10 PLAGIARISM 15

ARTICLE D3 – FULLY ASSEMBLED CAR 18

D3.1 Design and manufacture – [GENERAL | Penalty – 5pts each] 18
D3.2 Safe Construction [SAFETY | Penalty – 10pts each] 18
D3.3 Undefined features – [PERFORMANCE | Penalty – 20pts] 18
D3.4 Total length – [GENERAL | Penalty – 5pts per millimetre] 18
D3.5 Total width – [GENERAL | Penalty – 5pts per millimetre] 19
D3.6 Total weight – [PERFORMANCE | Penalty – 10pts per gram] 19
D3.7 Status during racing – [GENERAL | Penalty – 5pts] 19
D3.8 Replacement Components [GENERAL] 19

ARTICLE D4 – BODY 21

D4.1 Body construction – [GENERAL | Penalty – 20pts] 21
D4.2 No-go-zone – [PERFORMANCE | Penalty – 25pts] 21
D4.3 STEM Racing Halo – [PERFORMANCE] 21
D4.4 STEM Racing Helmet – [GENERAL | Penalty – 5pts] 23
D4.5 STEM Racing® logo decal location – [GENERAL | Penalty – 5pts] 24

ARTICLE D5 - POWER UNIT CARTRIDGE CHAMBER 26

D5.1 Distance from track surface – [GENERAL | Penalty – 5pts per millimetre] 26
D5.2 Power unit cartridge visibility – [PERFORMANCE | Penalty – 10pts per millimetre] 26

ARTICLE D6 – WHEELS 28

D6.1 Number and location – [GENERAL | Penalty – 25pts] 28
D6.2 Visibility – [PERFORMANCE | Penalty – 25pts] 28
D6.3 Visibility in front view – [PERFORMANCE | Penalty – 10pts per milimetre] 28
D6.4 Race track contact – [PERFORMANCE | Penalty – 2.5pts per wheel] 29
D6.5 Rotation – [GENERAL | Penalty – 5pts] 29

ARTICLE D7 – FRONT WING 31

D7.1 Description and placement – [PERFORMANCE | Penalty – 25pts] 31
D7.2 Wing identification – [GENERAL | Penalty – 5pts] 31
D7.3 Construction and rigidity – [SAFETY | Penalty – 5pts] 31
D7.4 Front wing location – [PERFORMANCE | Penalty – 10pts] 31
D7.5 Visibility of front wing – [PERFORMANCE | Penalty – 15pts] 31
D7.6 Front wing dimensions – [GENERAL] 32

ARTICLE D8 – REAR WING 33

D8.1 Description and placement – [PERFORMANCE | Penalty – 25pts] 34
D8.2 Wing identification – [GENERAL | Penalty – 5pts] 34
D8.3 Construction and rigidity – [SAFETY | Penalty – 5pts] 34
D8.4 Rear wing location – [PERFORMANCE | Penalty – 10pts] 34
D8.5 Rear wing height – [PERFORMANCE | Penalty – 10pts] 34
D8.6 Rear wing dimensions 34

ARTICLE D9 – TETHER LINE GUIDES 37

D9.1 LOCATION – [SAFETY | PENALTY – 10PTS] 38
D9.2 INTERNAL DIMENSION – [SAFETY | PENALTY – 5PTS] 38
D9.3 TETHER LINE GUIDE SAFETY – [SAFETY | PENALTY – 10PTS] 39
APPENDIX 40
APPENDIX I. START BOX AND FINISH LINE 41
APPENDIX II. OFFICIAL F1® MODEL BLOCK DIMENSIONS 42
APPENDIX III. DEVELOPMENT CLASS 'NO-GO-ZONE' 43
APPENDIX IV. HALO 45
APPENDIX V. DEVELOPMENT CLASS STANDARD WHEEL DESIGN 47
APPENDIX VI. DEVELOPMENT CLASS STANDARD AXLE 47

Rule revisions from the previous season

Just like in the real world of Formula 1®, at the end of each season we reflect on our rules and make any changes we think are important. If you see the 'NEW!' symbol next to any rule, we've made changes to it for the new season so make sure you read it extra carefully.

How to use the Technical Regulations booklet

In this booklet you will find all the technical rules and regulations for designing and making your car. These rules must be followed to avoid penalty points in scrutineering. Pay special attention to any Proportional Penalties (illustrated by the **PP+** symbol), or **PERFORMANCE rules, highlighted in yellow**, as breaking these means you cannot win the Fastest Car or Best Engineered car award. Some phrases we use are advanced engineering terms, but don't worry – we've added some *explanations in green* just to make things easier to understand. All minimum and maximum dimensions are also highlighted in **bold blue**, so keep an eye out for these throughout the booklet.

You will see that all the rules have been grouped into different areas of the car, as listed in the contents. We recommend you use this booklet in stages, as and when you need to find out about particular aspects of the car. Challenge yourself to learn the requirements for designing the front wing for example, then test yourself on them before getting creative with pens, modelling materials and CAD.

The bright red car

The diagrams in this booklet use an example car to show you how to design to certain rules. This car is NOT a winning car and has been created just to show you how to make sure your car is legal. We're sure you can do better, so get creative and show us how much more imaginative you can be with your own designs…

What to do next:

READ THE RULES!

- Read the technical regulations carefully one section at a time, so your design complies.
- Pay EXTRA SPECIAL attention to any **Proportional Penalties, which are explained on p11.**

Follow the sketching tutorial on the STEM Racing website

- Have a go at the IsoSketch® tutorial, which shows you how to sketch the chassis of your STEM Racing car. Then, you can either trace or photocopy this sketch to give you loads of chassis templates to start designing onto!

Get designing!

- Design the body of your STEM Racing car over the chassis sketch you have done. The more concepts your team comes up with, the better! F1® designers all need time to think creatively before sitting down at a computer, so do lots and lots of rough sketches and models to begin with.

Make sure you have a suitable 3D CAD package

- We recommend you download and install the **FREE** Autodesk Fusion 360 software onto your school computers (this can also be used at home). This is available from Autodesk through the STEM Racing website. Your 3D CAD package should be able to output **.stl** files (these are used to manufacture parts using CAM).

Download the following CAD files from the F1® in Schools website:

- There are **5** Development Class CAD models that can be downloaded to help you build your Development Class car. These are: **F1® model block, body 'no-go-zone', standard wheel, axle** and the **CO_2 cartridge**.

Get your Development Class Starter kit from DenfordWebshop.com

- The Development Class starter kit contains all the standard components needed to design and make your STEM Racing Development Class car. Apart from your wheels, whch can be 3D printed, all Development Class cars must be manufactured using this kit. Get manufacturing your car and put everything you've learned into practise!

ATTEND YOUR NEAREST REGIONAL FINAL, READY TO RACE…

DEVELOPMENT CLASS:

THE RULES

Definitions:	**05**
General Principles:	**09**
Car Design:	**11**
Appendix:	**25**
Index:	**30**

ARTICLE D1 – DEFINITIONS (a useful glossary of terms)

STEM Racing® can sound very technical sometimes, but it's really pretty simple. Here's a glossary of common terms, explaining what everything means:

D1.1 STEM Racing™ car

In simple terms: All the individual parts that make up an STEM Racing Development Class car.

In technical terms: This is also referred to as 'the car'. Designed and manufactured according to these regulations for the purpose of participating in races on the STEM Racing track at the Spain Regional and National Finals events, powered only by a single compressed air cartridge containing 8 grams of pressurised CO_2. STEM Racing cars are designed to travel the 20 metre race distance as quickly as possible, whilst withstanding the forces of launch acceleration, track traversing and physical deceleration after crossing the finishing line.

Your STEM Racing car assembly must **only** consist of the following components:

- A body (manufactured from Official SR Model Block – available from https://stemracing.es/material/
- Halo (avaibale to download from https://stemracing.es/descargas/
- 4 x standard design wheels
- 2 x axles / 4 x axle bushes
- Front wing assembly
- Rear wing assembly
- Surface finishing (e.g. paint) and decals / graphics
- STEM Racing logo decals
- A CO_2 cartridge chamber
- Tether line guides

Adhesives with no dimensional impact (e.g. superglue) are allowed for joining components.

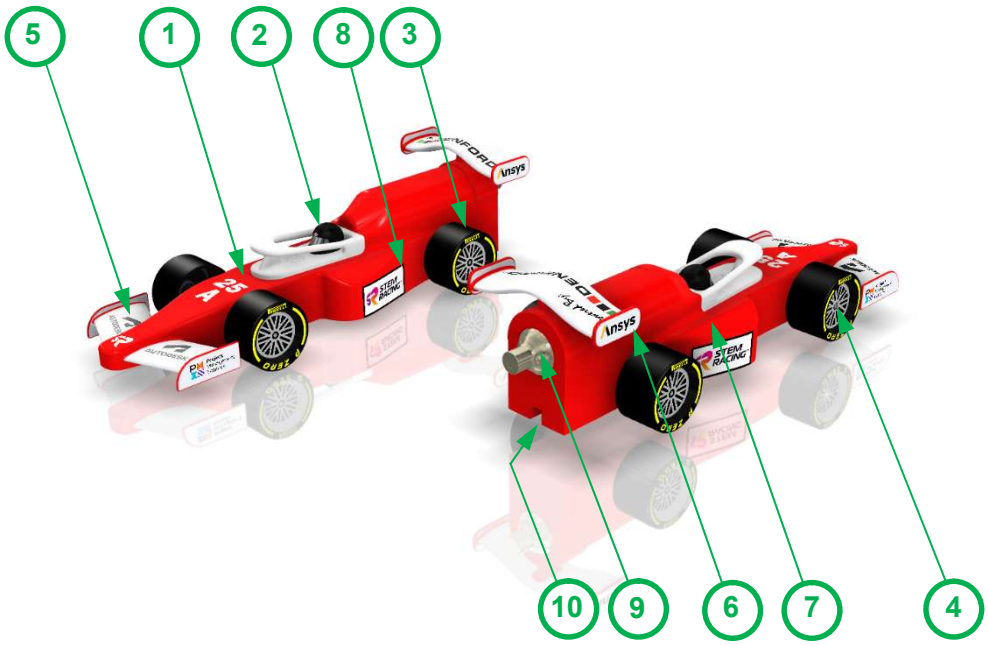

1. Body
2. Halo & Helmet
3. 4 x standard design wheels
4. Axles / guide tubes / bushes
5. Front wing assembly
6. Rear wing assembly
7. Surface finishing
8. STEM Racing logo decals
9. CO_2 cartridge chamber
10. Tether line guides

D1.2 Fully assembled car

In simple terms: Your completed car, ready to race.

In technical terms: An STEM Racing car, without a CO_2 cartridge inserted, presented ready for racing, resting on the track surface, free of any external force other than gravity.

D1.3 Body

In simple terms: The main part of your car, made from F1® Model Block.

In technical terms: The body is a solid uninterrupted piece of F1® Model Block Material existing rear of the front axle centre line and encompassing the No-go-zone, halo pocket and CO_2 cartridge chamber. For dimensional purposes the body also includes any attached decals and surface finishes. Any F1® Model Block forward of the front axle centre line is not defined as car body.

D1.4 Official SR Model Block

In simple terms: The material you **must** use to make your car body. (Included in the F1 Development Class starter kit, available from https://stemracing.es/material/)

In technical terms: The official F1® Model Block is a rigid, closed cell foam block processed to the dimensional features as shown by diagrams in **Appendix ii** of this document. **IMPORTANT:** all cars entered into the Spain season **must** be manufactured from F1® Model Blocks.

A universal 3D CAD part of the official model block can be downloaded from: https://stemracing.es/descargas/

D1.5 'No-go-zone'

In simple terms: The area you **CANNOT** design inside – the minimum size of your body.

In technical terms: The no-go-zone is a defined area within the official F1® Model Block, set by STEM Racing to provide a minimum safe working shape for the body of an STEM Racing Development Class car. The no-go-zone includes the halo platform which can be in 1 of 4 predefined positions. See **appendix iii** Development Class No-go-zone for more information.

Universal 3D CAD parts of the no-go-zone variations can be downloaded from:

https://stemracing.es/descargas/

D1.6 Halo

In simple terms: A safety device to stop the car using the Halo Deceleration System on the STEM Racing elevated race track.

In technical terms: The halo is a driver crash-protection system used in open-wheel racing series, which consists of a curved bar placed to protect the driver's head. The Halo is being introduced to STEM Racing not only to echo real F1® car design but also as a component of a new car deceleration system.

The Halo is available to download as a universal 3D part from the STEM Racing website. For this part and more free downloads, please visit https://stemracing.es/descargas/

The Halo MUST be included in the final car design. Detailed Engineering Drawings are available in appendix iv.

The new development class no-go-zone has a predesigned area to mount the halo on, known as the halo platform. The downloadable no-go-zone's include the halo platform in each of the 4 predefined positions.

To accommodate the 'Halo' your car will require two 6mm holes to be cut 40mm apart (using the jig provided) using the manufacturing instructions in appendix iv. The halo platform and no-go-zone have been developed to ensure the centre of the Halo 'Circular notch' for the deceleration system is exactly 34.0 mm ±1.0mm above the track surface. To achieve this, you must ensure the centre of your axle holes are 11mm above the bottom of your car body.

D1.7 Power unit cartridge chamber

In simple terms: The hole for the power unit gas cartridge

In technical terms: The power unit cartridge chamber is a cylindrical clear space bounded around its inner circumference and one end by car body only. This is where the power unit cartridge is placed for racing.

D1.8 Wheels

In simple terms: The standard wheel design you **must** use (available to download as a 3D part, or as included in the F1 Development Class starter kit available from https://stemracing.es/material/)

In technical terms: A wheel is a single part, cylindrical in form, with its maximum circumference contacting the track surface, enabling forward motion of the car through rotation. All material existing within the volume of the extreme diameter and width is considered to be part of the wheel. **IMPORTANT:** all Development Class cars entered into the UK season **must** use the standard wheel design, which is included in the Development Class startker kit.

A universal 3D CAD part of the standard wheel can be downloaded and 3D printed from:
https://stemracing.es/descargas/

D1.9 Axles

In simple terms: The standard axles you **must** use (Included in the F1 Development Class starter kit available from https://stemracing.es/material/)

In technical terms: Axles are single parts that connect a wheel to any other part of the car. **IMPORTANT:** all Development Class cars entered into the UK season **must** use the standard axles, which are included in the Development Class startker kit. These are supplied with 2 (two) plastic axle bushes and guide tubes per axle and must not be substituted with any other parts. Axles may only be modified in length (please refer to D6.1).

Universal 3D CAD parts of the standard axles and bushes can be downloaded from:
https://stemracing.es/descargas/

D1.10 Tether line guides

In simple terms: 2 screw eyes attached to the underside of your car, to keep it on the track. (Included in the official starter kit available from https://stemracing.es/material/)

In technical terms: A tether line guide is a key safety component which completely surrounds the track tether line so as to safely connect the car to the tether line during races. A tether line guide can be a component sourced from a supplier or manufactured wholly or in part by the team.

D1.11 Front / rear wing assembly

In simple terms: Wings mouted on the front and rear of your car, designed to control airflow.

In technical terms: A wing on an STEM Racing Development Class car is an aerodynamic feature that permits airflow around ALL of its surfaces including its features of a leading and trailing edge. The measurements used to calculate the dimensions of an STEM Racing car wing are the maximum and minimum span, chord and thickness. The vertical cross-sectional shape of the wing, parallel to the direction of car travel, is referred to as an aerofoil.

Definition of wing terminology:

A **leading edge** is the edge of the wing that cuts through the air first.

The **trailing edge** is the edge that the air touches last as it leaves the wing.

Wing **span** is just like the arm span of a human, or the wing span of a bird or plane. It is the total width of the wing across the body of the car including the car body.

Wing **chord** is the widest point of the wing's cross section, between the leading and trailing edges.

Wing **thickness** is the deepest point of the wing across it's cross section.

These terms are all shown on the diagram below, make sure you understand what they all mean!

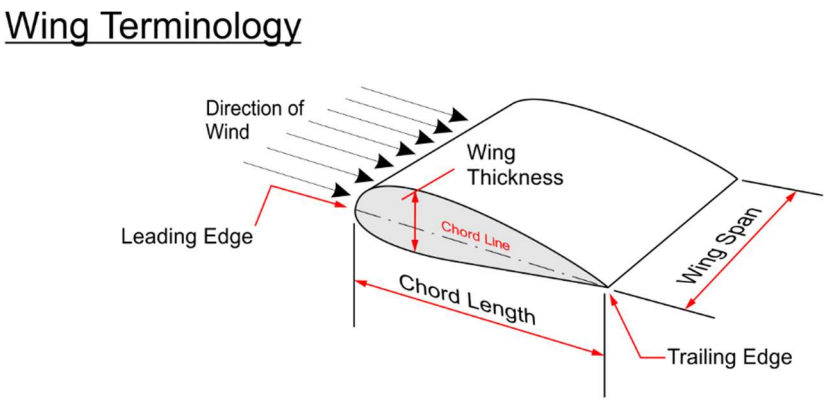

D1.12 Surface finish and decals

In simple terms: A fancy paint job and sponsor stickers.

In technical terms: A surface finish on an STEM Racing car is considered to be any applied visible surface covering, of uniform thickness over the profile of a car component. A decal is material adhered to a component or surface finish. To be defined as a decal, 100% of the area of the adhering side must be attached to a surface. Surface finishes and decals are included when measuring the dimensions of any components they feature on.

D1.13 Hand finishing

In simple terms: Filing, sanding and polishing.

In technical terms: Hand finishing is defined as use of a hand powered device (e.g. needle files, abrasive paper, lacquer) for removing only the irregularities that may remain on a CNC machined surface of the car body. These irregularities are often referred to as 'scalloping marks'.

D1.14 STEM Racing® logo decals

In simple terms: A white or black STEM Racing® sticker which must be stuck to each of your cars.

In technical terms: This consists of the STEM Racing logo graphic printed on a black or a white adhesive vinyl with a 1mm contrast keyline border, with a horizontal dimension of 30mm and vertical dimension of 15mm. Teams must use a decal to identify Car A and Car B. The official decals are supplied by STEM Racing Ltd at event registration. A team can manufacture and fit their own decals, provided they use the official STEM Racing logo decal artwork which can be downloaded from the STEM Racing website:

https://stemracing.es/descargas/

Decal designs:

D1.15 Engineering drawings

In simple terms: Orthgraphic and/or isometric drawings of your finished car, showing dimensions.

In technical terms: Engineering drawings are freehand or CAD produced drawings which should be such that they could theoretically be used to manufacture the fully assembled car by a third party. Such drawings must include all relevant dimensions, tolerances and material information. STEM Racing engineering drawings must include detail to specifically identify and prove compliance for wing surfaces (refer to D7.2).

Engineering drawings can include: orthographic projection, auxiliary projection, section views, isometric projection, oblique projection, perspective and annotated renderings.

It is recommended to label the relevant technical regulations where appropriate throughout your Engineering drawings **(e.g. D7.8.1: 65mm)**; this makes the job of the specification judge much easier in identifying the different features of your car.

D1.16 Renderings

In simple terms: Freehand or CAD presentation images of your finished car

In technical terms: Renderings are images intended to illustrate the three dimensional form of an object. These can be generated in isometric projection, oblique projection or perspective.

D1.17 Vertical reference plane

In simple terms: An imaginary slice through the centre of your car, used to describe measurements

In technical terms: To assist with describing dimensions, it is assumed that a two dimensional invisible plane exists along the length of the CO_2 cartridge chamber centre axis and perpendicular to the track surface. This is known as the vertical reference plane.

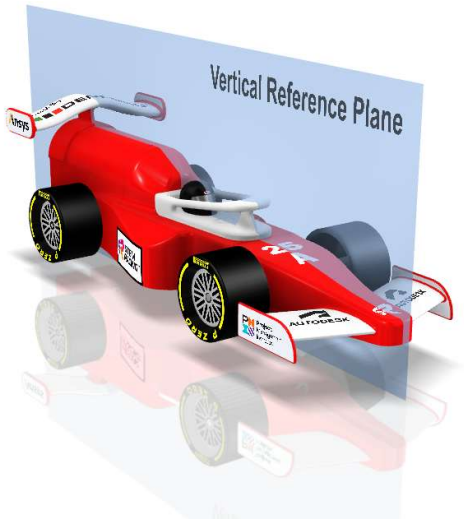

D1.18 Normal

In simple terms: At right angles to another object

In technical terms: The term 'normal' is used in geometry to describe a line or object that is perpendicular or at 90 degrees to another given object. When referring to the term normal in these regulations it is considered to mean:

a. Being at right angles; perpendicular.

b. Perpendicular to the direction of a tangent line of a curve or a tangent plane to a surface.

D1.19 Additional components

Any component other than those listed in D1.1 will be considered an additional component. Please refer to D3.8 and also the corresponding UK Competition Regulations.

D1.20 Full 8 gram Power unit cartridge

A metallic cartridge which contains a compressed 8 gram charge of CO_2. For weights and dimensions refer to apendix iv. Official Denford Race Power Pack dimensions.

ARTICLE D2 – GENERAL PRINCIPLES *(the small print!)*

D2.1 Regulations documents

D2.1.1 STEM Racing Ltd. issues the regulations, their revisions and amendments made.

D2.1.2 Technical Regulations - this document. The Development Class Technical Regulations document is mainly concerned with those regulations that are directly related to STEM Racing car design and manufacture. Development Class Technical regulation article numbers have a 'D' prefix.

D2.1.3 Competition Regulations – a document separate to this one which is mainly concerned with regulations and procedures directly related to judging and the competition event. Competition Regulation article numbers have a 'C' prefix.

D2.2 Interpretation of the regulations

D2.2.1 The final text of these regulations is in English should any dispute arise over their interpretation. The text of a regulation and any related definitions should be considered together for the purpose of interpretation.

IMPORTANT: Diagrams and or images are for illustration purposes only and do not contribute to regulatory compliance.

D2.2.2 Text clarification - any questions received that are deemed by STEM Racing Ltd. to be related to regulation text needing clarification will be answered by STEM Racing Ltd. The question received, along with the clarification provided by STEM Racing Ltd., will be published online at the same time.

D2.3 Amendments to the regulations

Any amendments will be announced and released by STEM Racing Ltd. on the official Spain website: https://stemracing.es/. Any amended text will be indicated **thus** (using red underlined text).

D2.4 Classification of regulations

D2.4.1 The technical regulations are classified as either: **GENERAL**, **SAFETY**, **PERFORMANCE**.

GENERAL	SAFETY	PERFORMANCE
Regulations that shape the way the car fundamentally looks and works, vital to the style of an STEM Racing car.	Mandatory rules that govern the safe running of the car. Cars must meet these rules to be considered 'safe to race'.	Rules that have a direct impact on the performance of the vehicle, these typically carry the heaviest penalties.

D2.4.2 If a race car is judged as being NON-COMPLIANT with any **Performance** regulation they will be **INELIGIBLE for the awards of: 'Fastest Car' and 'Best Engineered Car'**. All **Performance** regulations are highlighted in yellow throughout this document.

D2.5 Compliance with regulations

D2.5.1 Points are deducted for non-compliance with the technical regulations as per the penalties as defined in this document. Both race cars are assessed during Specification Judging and points will be deducted for any infringements on either car. These penalties are only applied once, per infringement, per car.

D2.5.2 Proportional penalties will be applied to regulations showing the PP+ symbol. The penalty applied increases proportionally as the margin of non-compliance with the absolute minimum/maximum dimension increases, by rounding up the non-compliance to the next complete unit of measure (1.0mm or 1.0g). The penalty is applied once for every complete unit outside of the absolute minimum/maximum dimension. E.g.

Regulation example	Measurement	Pass/Fail	Margin of fail	Penalty
D3.5 Total weight – [PERFORMANCE | Penalty – 10pts] Absolute Min: 60.0g	59.9g – 59.0g	FAIL	0.1g-1.0g	10pts
	58.9g – 58.0g	FAIL	1.1g-2.0g	20pts
	57.9g – 57.0g	FAIL	2.1g-3.0g	30pts

D2.6 Design ideas and regulation compliance questions

Teams are not permitted to seek a ruling from STEM Racing Ltd. or any competition officials or judges before the event as to whether a design idea complies with these regulations. Rulings will only be made by the judges at the Regional and National Finals events. Design compliance to the regulations forms part of the competition.

As in Formula 1®, innovation is encouraged and STEM Racing teams may also find ways of creating design features that push the boundaries of the regulations in order to get an extra competitive edge.

D2.7 Measurements

D2.7.1 All dimensions and weights are presented as absolute minimum or maximum, unless stated otherwise. For example:

MIN Weight Absolute Min: 60.0g	MIN Dimension Absolute Min: 170.0mm	MAX Dimension Absolute Max: 210.0mm
60.0g - **PASS**	170.0mm - **PASS**	210.0mm - **PASS**
59.9g - **FAIL**	169.9mm - **FAIL**	210.1mm - **FAIL**

D2.7.2 **Dimensional measures** - all car component dimensions are inclusive of any applied paint finish or decal. A series of specially manufactured gauges which can be downloaded from the STEM Racing website https://stemracing.es/descargas/ will be used to broadly verify dimensional compliance. Accurate measuring tools, such as vernier calipers, will then be used to closely inspect any dimensions found to be close to the dimensional limits per the initial gauge inspection. **IMPORTANT**: Some regulations are assessed with a full 8.0g race cartridge fully inserted into the cartridge chamber. In these regulations, the car must be capable of resting equally on all four (4) wheels without any outside assistance.

D2.7.3 **Weight measures** – all weight measurements will be made using the STEM Racing Ltd. calibrated electronic competition scales.

D2.8 Benefit of doubt

The chair of judges will, where appropriate, seek to use 'benefit of doubt' when the assessment of compliance is marginal or unclear. In this situation, teams will be given the benefit of doubt rather than a firm penalty if a penalty cannot be clearly measured or identified.

D2.9 Spirit of the competition

Teams are expected to act in the spirit of the competition, both before and during any STEM Racing events. Any team deemed by the chair of judges to be acting outside of the spirit of the competition, can be removed from certain or all aspects of the competiton. For example, a team attempting to abuse the technical regulations to their advantage may, at the discretion of the chair of judges, be removed from racing and receive no points for this activity. A team deemed to be acting in an unsportsmanlike manner towards another team or other persons may be removed from some or all judging areas.

The spirit of the competition is simple; embrace and respect the rules and regulations, do your very best to compete legally and fairly, while contributing positively to STEM Racing. Make friends, create positive relationships, network professionally and enjoy yourselves.

D2.10 Plagiarism

STEM Racing LTD views cases of plagiarism very seriously. Competing teams at all levels of the competition that intentionally plagiarise any part of their assessed work, undermines the credibility and integrity of the STEM Racing challenge and the spirit of the competition. STEM Racing will be implementing various plagiarism detection methodologies. Further details will be available in the corresponding Spain Competition Regulations.

Please make sure you have also read the corresponding STEM Racing SPAIN Competition Regulations

CAR DESIGN

COMPLIANCE AND PENALTIES

Article 3: Fully assembled car	15
Article 4: Body	17
Article 5: CO_2 cartridge chamber	19
Article 6: Wheels	21
Article 7: Wings	23
Article 8: Tether Line Guides	26

ARTICLE 3:

FULLY ASSEMBLED CAR

ARTICLE D3 – FULLY ASSEMBLED CAR

D3.1 Design and manufacture – [GENERAL | Penalty – 5pts each]

D3.1.1 All STEM Racing cars must be designed and engineered using CAD (Computer Aided Design) software and CAM (Computer Aided Manufacture) technology. CAD software used should provide for 3D part modelling, assembly and 3D realistic rendering. The CAM package should allow students to simulate CNC machining processes so they can show evidence of these in their portfolio. We recommend the use of Denford QuickCAM PRO software.

D3.1.2 The body of all STEM Racing cars must be manufactured via material removal using a CNC router/milling machine. We recommend all teams use a Denford CNC router. This manufacturing process should occur at your school/college or at a designated manufacturing centre/partner site.

D3.1.3 An official STEM Racing holographic sticker from the official F1® Model Block for each car must be submitted on the project element submission sheet at registration at the Regional and National Finals events.

D3.1.4 The individual components of both race cars must be designed with identical geometry.

D3.2 Safe Construction [SAFETY | Penalty – 10pts each]

D3.2.1 **Specification judging** - all submitted cars will be inspected closely to ensure that they are engineered and constructed safely for the purpose of racing. If the judges rule an aspect of either race car to be unsafe for racing, the team will be required to carry out repairs / modifications to the car(s). Any such repair work will result in a penalty of 10 points per unsafe car.

D3.2.2 **During racing** – the race officials will routinely inspect cars for safety during scheduled races. If the officials rule a car to be unsafe, a penalty of 10 points will be imposed at the discretion of the Chair of Judges. The team may repair the car as per the Competition Regulations – C10 Car Repairs and Servicing.

D3.3 Undefined features – [PERFORMANCE | Penalty – 20pts]

The car assembly must only consist of components listed in ARTICLE D1.1.

D3.4 Total length – [GENERAL | Penalty – 5pts per millimetre]

PP+ Total length is measured between the front and rear extremities of the assembled car, parallel to the track surface and vertical reference plane. (See diagram below for example)

Absolute Min: 170mm / Absolute Max: 210mm

D3.5 Total width – [GENERAL | Penalty – 5pts per millimetre]

PP+ Width is the maximum assembled car width, measured normal to the vertical reference plane, between the outer edges of the widest feature of the car assembly. (See diagram below for example)

Absolute Max: 90mm

D3.6 Total weight – [PERFORMANCE | Penalty – 10pts per gram]

PP+ Total weight is the weight of the car excluding a power unit cartridge. If ruled underweight, ballast will be added before racing, at 0.2g for every 0.1g underweight.

Absolute Min: 60.0g

D3.7 Status during racing – [GENERAL | Penalty – 5pts]

The car assembly must be designed so that no items other than those listed in D1.1, or Power Unit cartridges are removed, replaced or added to the assembly during scheduled race events.

D3.8 Replacement Components [GENERAL]

Any spare / replacement components should be identical in design and geometry to those fitted to the car and must be submitted with the cars at registration. Only the following spare / replacement components are permitted:

Component	Max Quantity
Nose cone & front wing assembly	2
Rear wing assembly	2
Front wheels	4
Front wheel support structure	2
Rear wheels	4
Rear wheel support structure	2

ARTICLE 4:

BODY

ARTICLE D4 – BODY

D4.1 Body construction – [GENERAL | Penalty – 20pts]

A single continuous piece of CNC manufactured F1® Model Block material must exist rear of the front axle centre line, encompassing both the no-go-zone and power unit cartridge chamber.

D4.2 No-go-zone – [PERFORMANCE | Penalty – 25pts]

The no-go-zone is a specific area, defined by STEM Racing Ltd that must be preserved in your finished design. As such, no part of the body design is permitted to fall inside the no-go-zone. The only permitted modification to the no-go-zone is the placement of two (2) axle holes. **Please see Appendix iii** for no-go-zone diagrams and download the official no-go-zone .ipt part from https://stemracing.es/descargas/

Halo Platform

The Halo Platform is an integral part of the No-go-zone. However, you may move it up to 30mm from the chamber bulkhead in increments of 10mm.

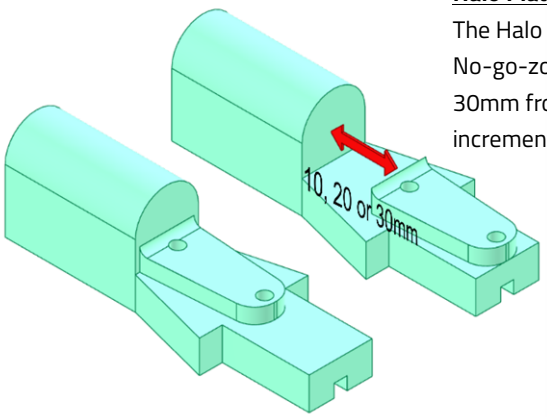

Front isometric view:

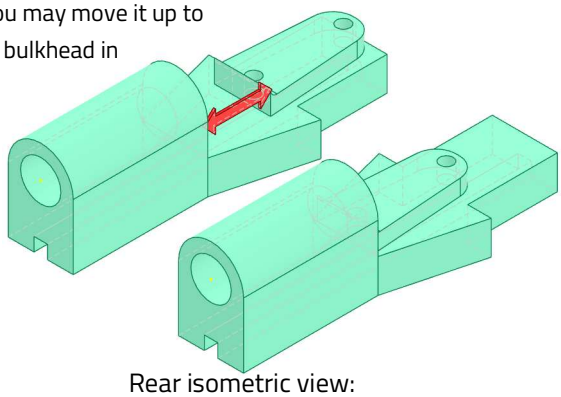

Rear isometric view:

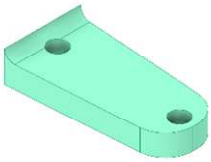

Halo Platform

D4.3 STEM Racing Halo – [PERFORMANCE]

D4.3.1 STEM Racing Halo – [PERFORMANCE | Penalty – 5pts]

The Halo MUST be included in the car design without any dimensional changes. The file can be download from https://stemracing.es/descargas/ ***Please see appendix iv for detailed dimensions.***

D4.3.2 STEM Racing Halo Visibility Front, Side and Plan View – [GENERAL | Penalty – 5pts]

Visibility of the Halo must not be physically obstructed by any other component when viewed in the front, side or plan views.

SIDE VIEW

When viewed from the side, everything inside the red outline MUST be visible.

FRONT VIEW

When viewed from the front, everything inside the red outline MUST be visible.

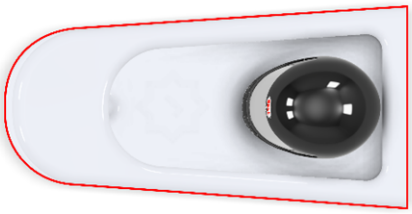

TOP VIEW

When viewed from the top, everything inside the red outline MUST be visible.

D4.3.3 STEM Racing Halo Circular Notch Height – [SAFETY | Penalty – 5pts]

To be effective the centre of the Circular Notch must be 34.0mm (±1.0mm) above the track surface.

To achieve this, it is recommended that axle centres are 11.0mm from the bottom of the body.

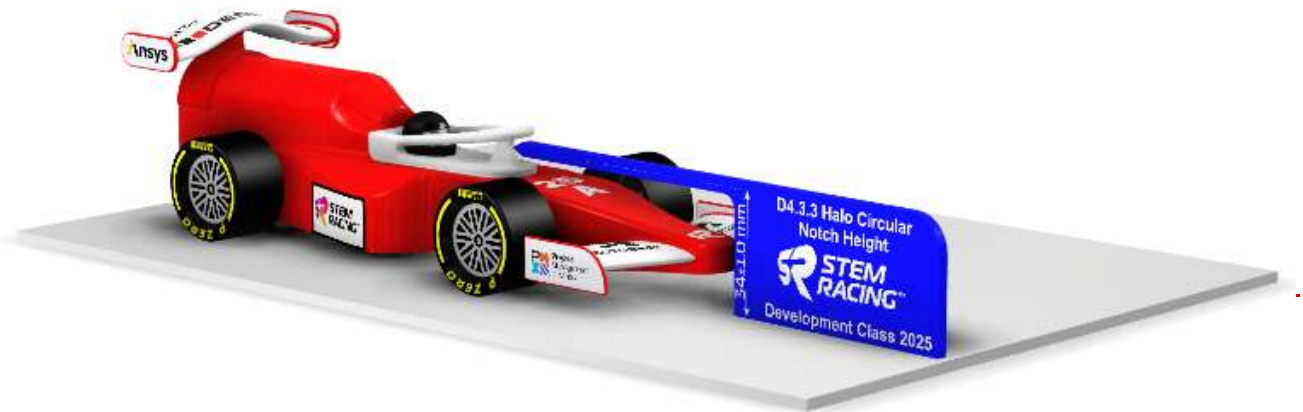

©

D4.3.4 STEM Racing Halo Safety Test – [SAFETY | Penalty – 5pts]

With the car supported on a power unit cartridge a 1kg load will be suspended on the weigh bar to give a loading of 2kg at point of contact on the Halo circular notch.

D4.4 STEM Racing Helmet – [GENERAL | Penalty – 5pts]

The Helmet is a standard part designed by STEM Racing that MUST be included in the car design without any dimensional changes. The Helmet is available to download as a universal 3D part from the STEM Racing website. For this part and more free downloads, please visit **https://stemracing.es/descargas/** The helmet may be manufactured out of any material.

D4.5 STEM Racing® logo decal location – [GENERAL | Penalty – 5pts]

An STEM Racing logo decal (refer to ARTICLE D1.14) must be wholly adhered to each **side** of the car, positioned between the front and rear wheels and being clearly legible in the respective side view. Teams may manufacture their own decals but must use the artwork supplied by STEM Racing Ltd.

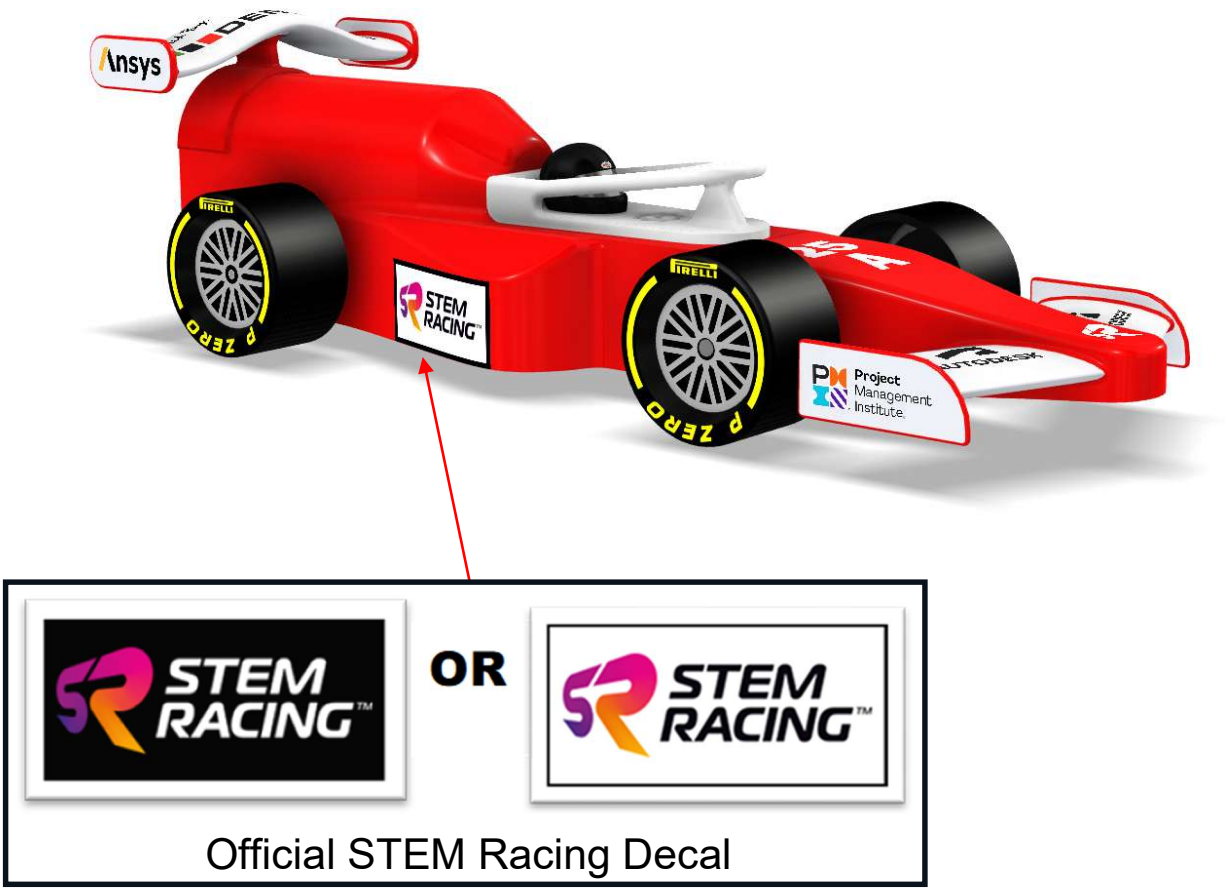

ARTICLE 5:

POWER UNIT CARTRIDGE CHAMBER

ARTICLE D5 - POWER UNIT CARTRIDGE CHAMBER

D5.1 Distance from track surface – [GENERAL | Penalty – 5pts per millimetre]

PP+

This is measured with a full 8g power unit cartridge inserted into the cartridge chamber, from the rear centre of the power unit cartridge to the track surface, measured normal to the track surface with the car sitting on all four (4) wheels with no outside assistance.

Absolute Min: 30.0mm / Absolute Max: 40.0mm

D5.2 Power unit cartridge visibility – [PERFORMANCE | Penalty – 10pts per millimetre]

PP+

There must be no obstructions to the cartridge chamber from the rear view. The cartridge chamber must be free and clear of any objects that the judges could deem obstructive to fully inserting a POWER UNIT cartridge.

Take extra care to ensure that screw eyes (tether line guides) and axles DO NOT pass through the cartridge chamber.

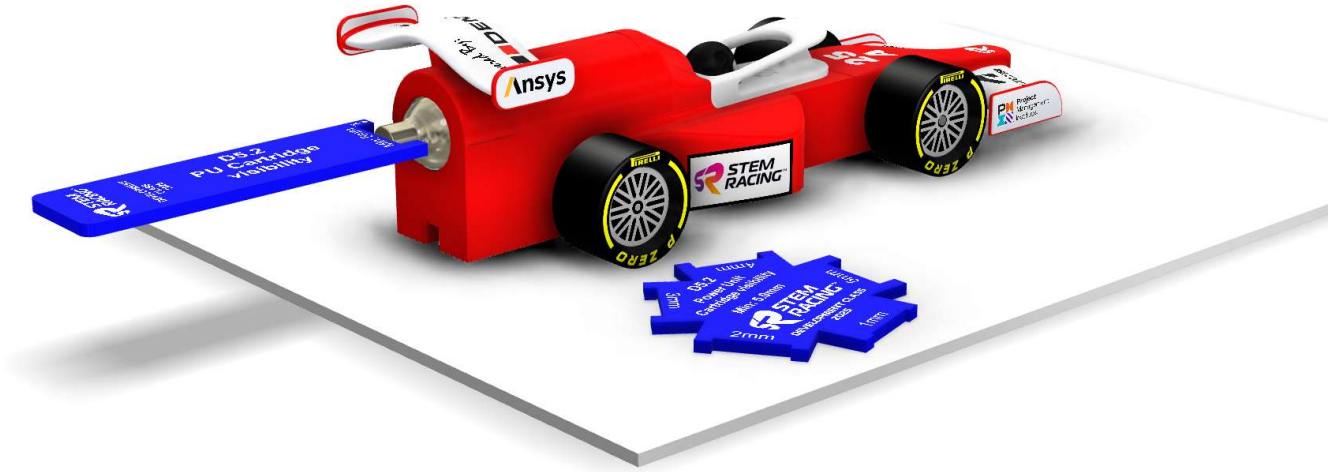

ARTICLE 6:

WHEELS

ARTICLE D6 – WHEELS

D6.1 Number and location – [GENERAL | Penalty – 25pts]

The car assembly must use the official STEM Racing Development Class standard wheel design (as supplied in the Development Class starter kit, available from https://stemracing.es/material/). Please refer to appendices v and vi and download the 3D .ipt parts to use as part of your CAD assembly.

- Four standard design wheels, unmodified in geometry (supplied or 3D printed)
- Four axle bushes (as supplied with Development Class starter kit)
- Two continuous axles and guide tubes as supplied, length only can be modified
- The axle guide holes may be machined by a hand or a CNC process

Note: 3D printed wheels **are** permitted, provided the geometry remains unchanged from the standard design wheel. No other modifications to the wheels or axles systems are allowed, all parts must be those supplied in the official Development Class starter kit.

D6.2 Visibility – [PERFORMANCE | Penalty – 25pts]

View of all wheels must not be obscured by any component of the car in the car's top, side and bottom elevation views. A 3mm exclusion zone must exist to the front and rear of all wheels in the plan and bottom views. **Absolute Min: 3mm**

View of wheels not obstructed in top, bottom or side views

D6.3 Visibility in front view – [PERFORMANCE | Penalty – 10pts per milimetre]

PP+ The visibility of the front wheels in the car's front view may only be obstructed to a height of 20mm from the track surface.

Absolute Max obstruction: 20mm

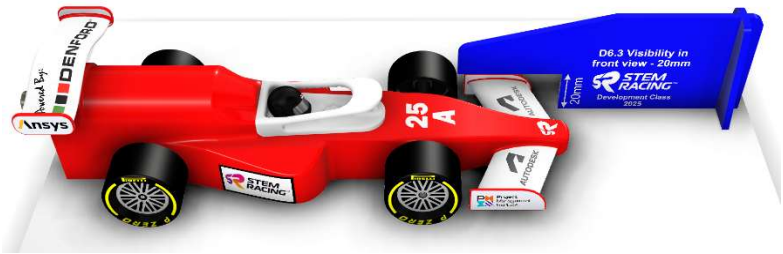

D6.4 Race track contact – [PERFORMANCE | Penalty – 2.5pts per wheel]

All four (4) wheels must touch the racing surface at the same time across the full width of the wheel.

D6.5 Rotation – [GENERAL | Penalty – 5pts]

The track contact surface of all four (4) wheels must rotate freely about their own centre axis to facilitate forward motion of the car during racing. The scrutineering judge must be able to validate this with reasonably minimal effort.

ARTICLE 7:

FRONT WING

ARTICLE D7 – FRONT WING

D7.1 Description and placement – [PERFORMANCE | Penalty – 25pts]

The design of the car should resemble an actual F1 car through the inclusion of a wing on the nose of the car and a wing at the rear of the car. Each wing must have a leading edge and a trailing edge. Refer to the definitions in D1.10.

D7.2 Wing identification – [GENERAL | Penalty – 5pts]

The span, chord and thicknesses of both the front and rear wings MUST be identified clearly within the engineering drawings submitted for scrutineering judging.

D7.3 Construction and rigidity – [SAFETY | Penalty – 5pts]

The front wing, rear wing and any support structures may be manufactured directly from the model block, or from any separate materials, including laser cut and 3D printed materials. The wing shape must remain unchanged during races, i.e. wings must be rigid, ruled at the judge's discretion.

D7.4 Front wing location – [PERFORMANCE | Penalty – 10pts]

The whole of the front wing and any support structure must be in front of the centre line of the front wheel when viewed in the side elevation.

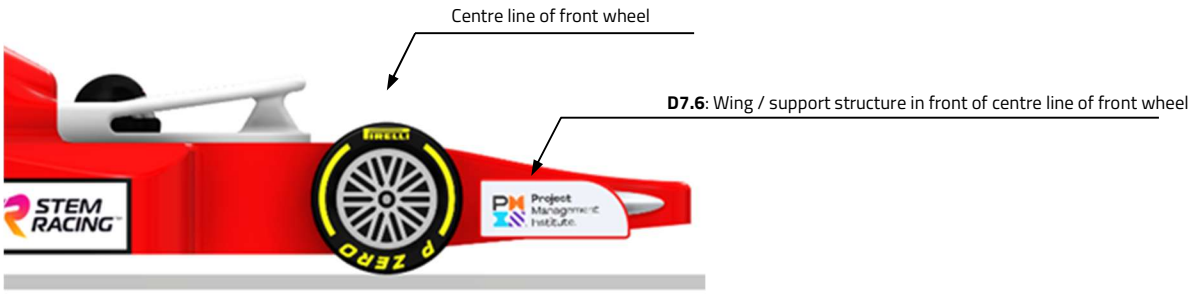

D7.5 Visibility of front wing – [PERFORMANCE | Penalty – 15pts]

Visibility of the front wing must not be obstructed by any other component when viewed in the front elevation.

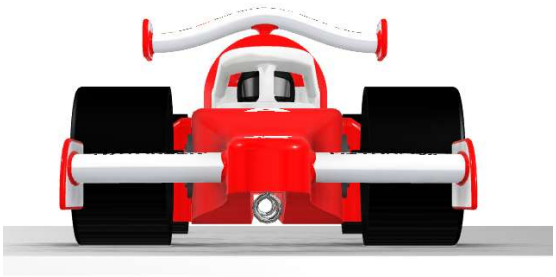

D7.7: Visibility of front wing not obstructed in this view

D7.6 Front wing dimensions – [GENERAL]

D7.6.1 Front wing dimensions **– [GENERAL | Penalty – 5pts each per millimetre]**

The wing span is measured on the top or bottom surface of the wing, whichever is shortest, parallel to the track surface and normal to the vertical reference plane. *(See illustration below)*

Absolute Min: 60mm

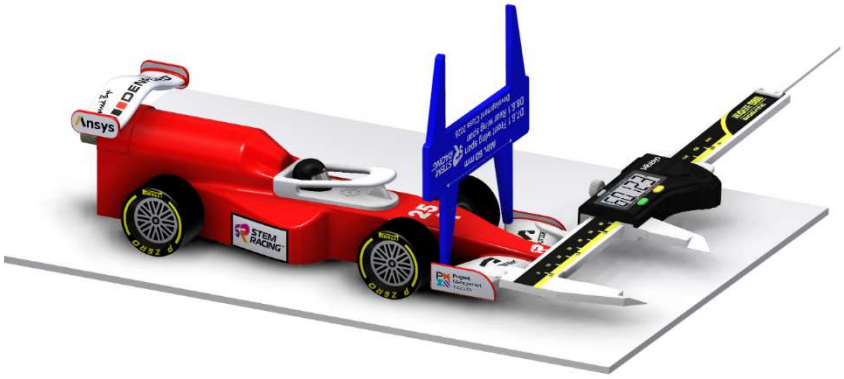

D7.6.2 Front wing chord – [GENERAL | Penalty – 5pts each]

The wing chord minimum and maximum dimensions must exist throughout the wing span. Chord is measured parallel to the vertical reference plane. *(See illustration below)*

Absolute Min: 15mm / Absolute Max: 30mm

D7.6.3 Front wing thickness – [GENERAL | Penalty – 5pts each]

The wing thickness minimum dimension must exist throughout the wing's minimum span, measured perpendicular *(at 90° to)* to the chord line. *(See illustration below)*

Absolute Min: 5mm / Absolute Max: 15mm

ARTICLE 8:

REAR WING

ARTICLE D8 – REAR WING

D8.1 Description and placement – [PERFORMANCE | Penalty – 25pts]

The design of the car should resemble an actual F1 car through the inclusion of a wing on the nose of the car and a wing at the rear of the car. Each wing must have a leading edge and a trailing edge. Refer to the definitions in D1.10.

D8.2 Wing identification – [GENERAL | Penalty – 5pts]

The span, chord and thicknesses of both the front and rear wings MUST be identified clearly within the engineering drawings submitted for scrutineering judging.

D8.3 Construction and rigidity – [SAFETY | Penalty – 5pts]

The front wing, rear wing and any support structures may be manufactured directly from the model block, or from any separate materials, including laser cut and 3D printed materials. The wing shape must remain unchanged during races, i.e. wings must be rigid, ruled at the judge's discretion.

D8.4 Rear wing location – [PERFORMANCE | Penalty – 10pts]

The whole of the rear wing and any support structure must be behind the centre line of the rear wheel when viewed in the side elevation.

D8.5 Rear wing height – [PERFORMANCE | Penalty – 10pts]

The bottom surface of the rear wing must be higher than 35mm when measured from and normal to the track surface.

Absolute Min: 35mm

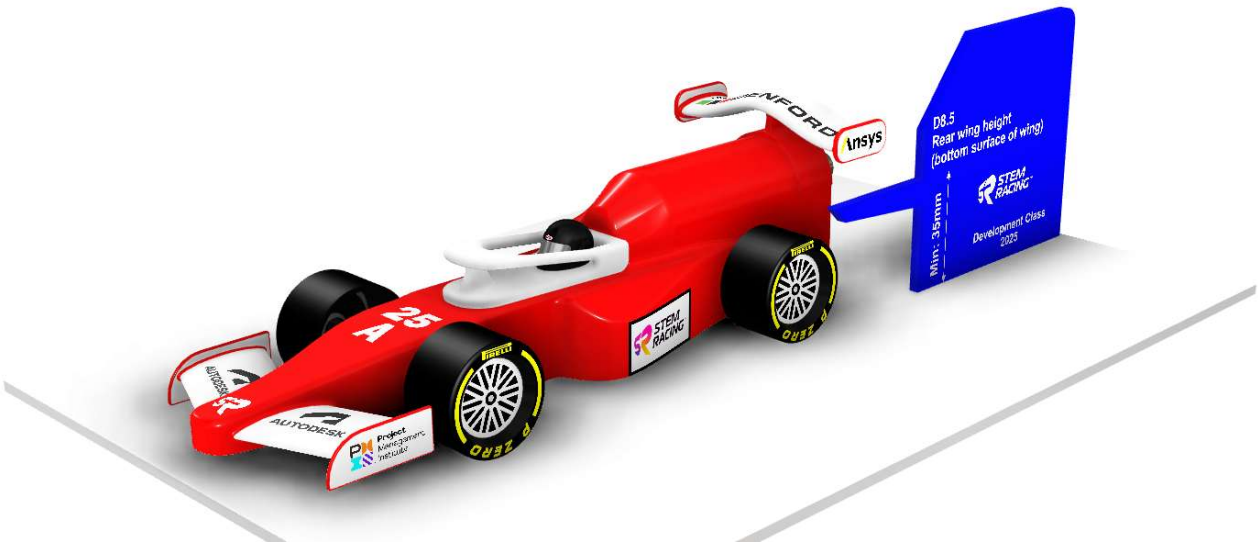

D8.6 Rear wing dimensions

D8.6.1 Rear wing span – [GENERAL | Penalty – 5pts each per millimetre]

The wing span is measured on the top or bottom surface of the wing, whichever is shortest, parallel to the track surface and normal to the vertical reference plane. *(See illustration below)*

Absolute Min: 60mm

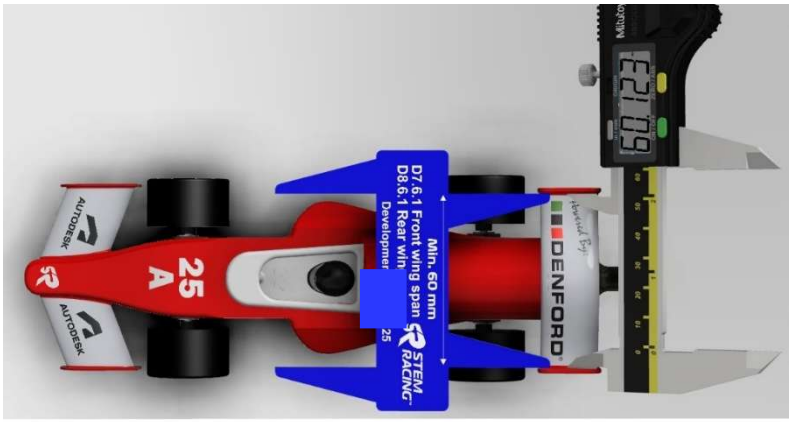

D8.6.2 Rear wing chord – [GENERAL | Penalty – 5pts each]

The wing chord minimum and maximum dimensions must exist throughout the wing span. Chord is measured parallel to the vertical reference plane. *(See illustration below)*

Absolute Min: 15mm / Absolute Max: 30mm

D8.6.3 Rear wing thickness – [GENERAL | Penalty – 5pts each]

The wing thickness minimum dimension must exist throughout the wing's minimum span, measured perpendicular *(at 90° to)* to the chord line. *(See illustration below)*

Absolute Min: 5mm / Absolute Max: 15mm

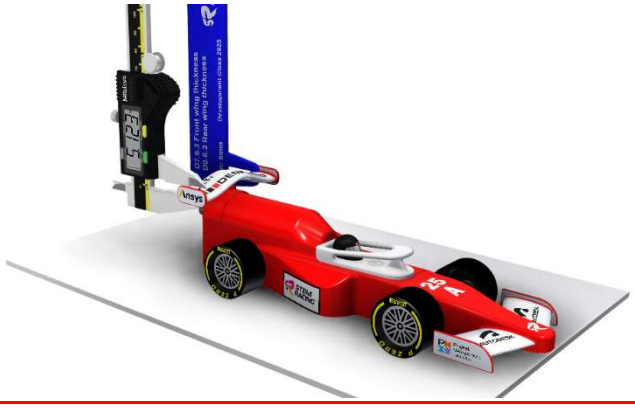

Rear wing examples

Both examples are compliant with D8.6.1 Rear wing span

**Please not these are for illustration purposes only, full compliance against all regulations during specification judging will apply.*

ARTICLE 9:

TETHER LINE GUIDES

ARTICLE D9 – TETHER LINE GUIDES

D9.1 Location – [SAFETY | Penalty – 10pts]

Each car must have only two (2) firmly secured tether line guides, one on or up to 15.0mm in front of the front axle centre line and one on or up to 15.0mm behind the rear axle centre line of the car. The track tether line must only pass through both tether line guides during racing. *This means the tether CANNOT pass through an enclosed gap in your front or rear wing before passing through the tether guide.*

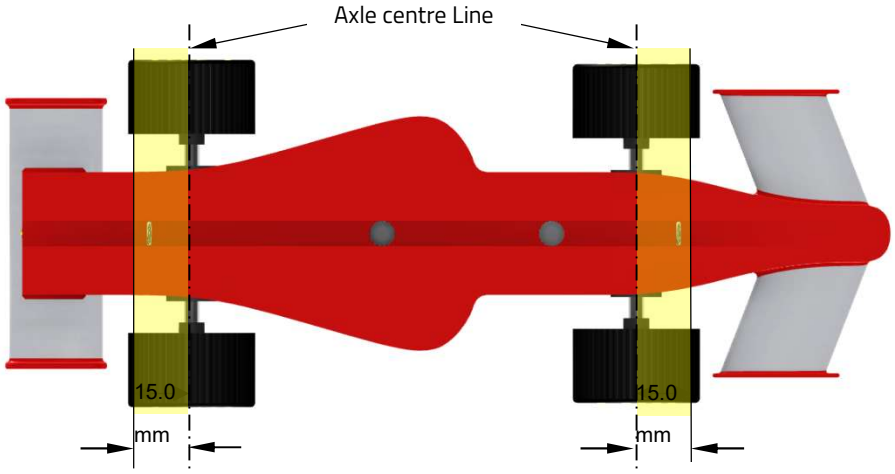

D9.2 Internal dimension – [SAFETY | Penalty – 5pts]

The internal measurement of the opening within the guide which the tether line passes through.

Absolute Min: 3.5mm / Absolute Max: 6mm

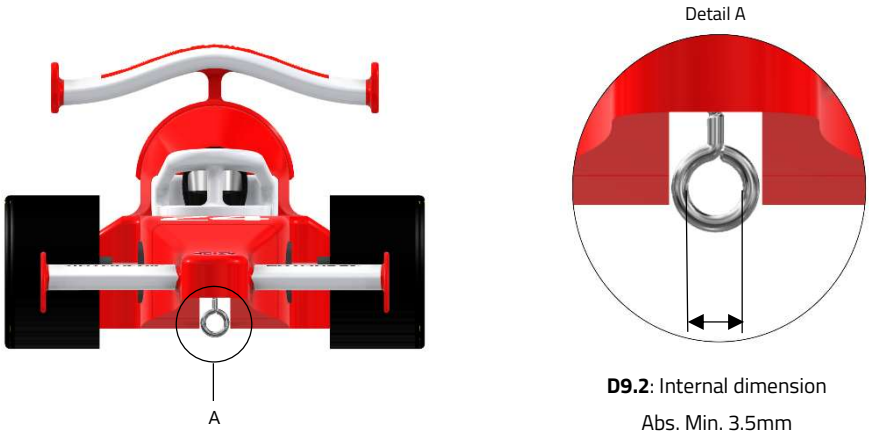

D9.2: Internal dimension
Abs. Min. 3.5mm

D9.2: Internal dimension test with a 3.5mm drill bit

D9.3 Tether line guide safety – [SAFETY | Penalty – 10pts]

The guide holes must be completely closed to prevent the tether line from slipping out during racing. The construction of the tether line guides will be closely examined in relation to safety, please refer to ARTICLE D3.2 for more information. The guides must be robust so as to prevent the diameter or shape changing during racing. The below tether line guide test will be conducted during scrutineering. A 200g weight will be suspended from each tether line guide to check the guides are securely fitted to the car and safe to race.

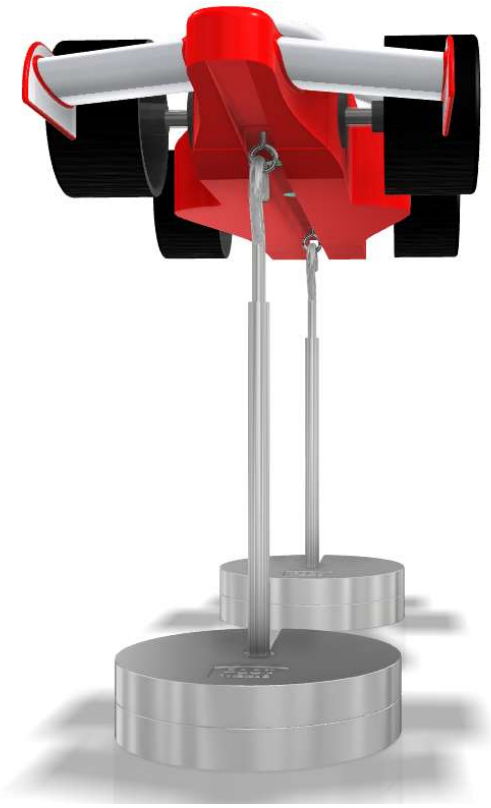

APPENDIX

Appendix i:	Start Box and Finish Line	41
Appendix ii:	Official F1® model block	42
Appendix iii:	No-go-zone	43
Appendix iv:	Halo	44
Appendix v:	Standard wheels	46
Appendix vi:	Standard axles	46

Appendix i. Start Box and Finish Line

The Start Boxes are designed to sit centrally within each lane of the track

The distance from the emitter centre line to the race track surface on both lanes is ~7mm

Light beam

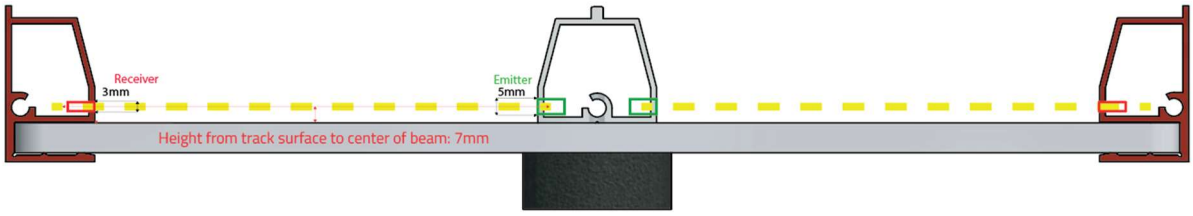

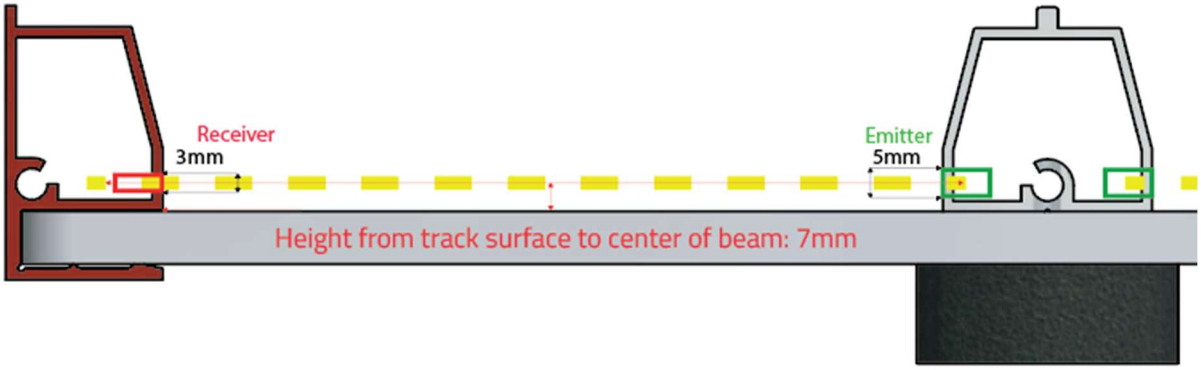

Appendix ii. Official F1® Model Block Dimensions

Below: orthographic projection of F1® Model Block. All dimensions shown in millimetres.

This component is available to download FREE as a universal 3D CAD part from the STEM Racing website. For this part and more, please visit: https://stemracing.es/descargas/

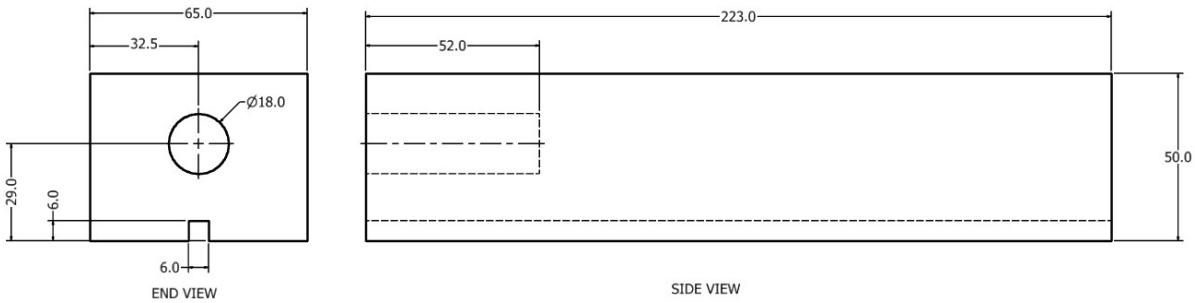

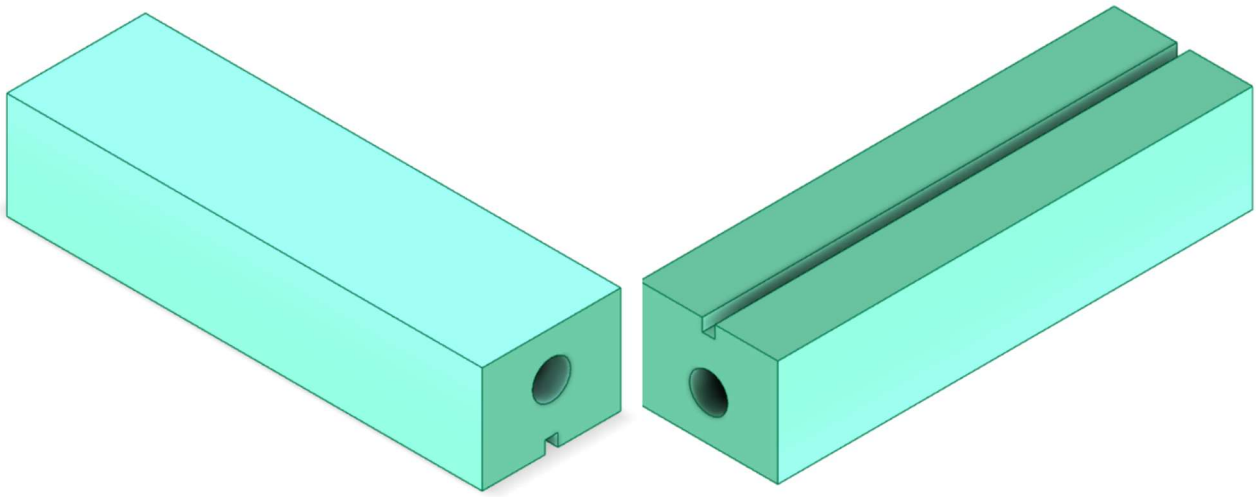

Appendix iii. Development Class 'no-go-zone'

The Specification Judges will measure your car body to check the minimum dimensions of the no-go-zone are present, as one continuous piece of model block. We would strongly recommend starting your 3D CAD model using the official STEM Racing no-go-zone 3D part. These components are available to download FREE as a universal 3D CAD part from the STEM Racing website. For this part and more, please visit: https://stemracing.es/descargas/

Orthographic Views

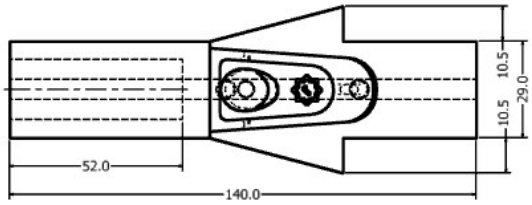

Top View

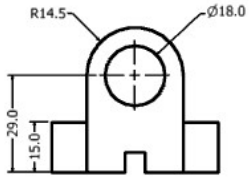

Rear View

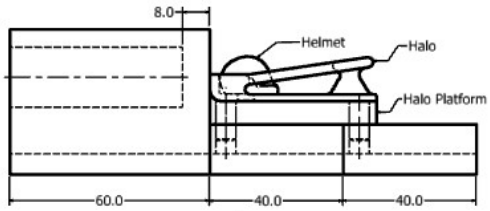

Side View

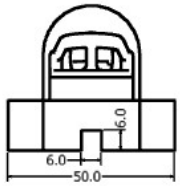

Front View

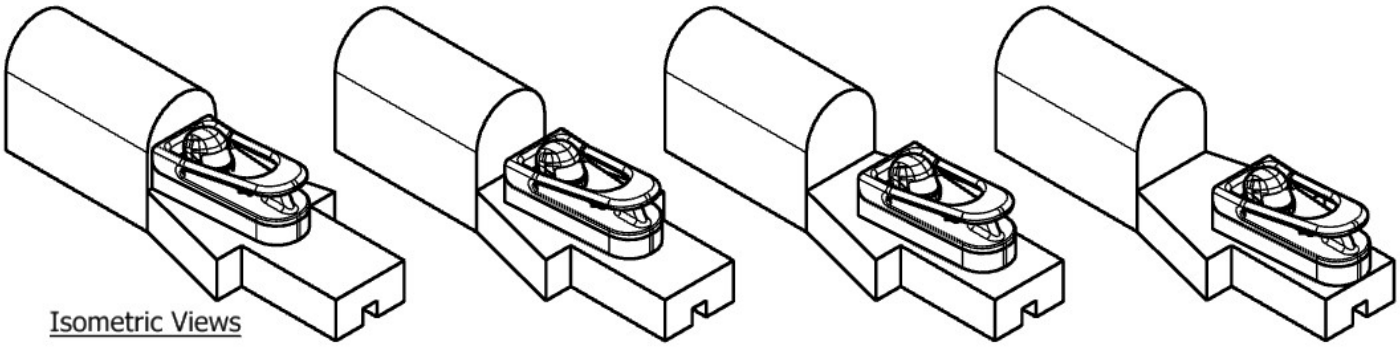

Isometric Views

Halo Platform with 0mm offset | Halo Platform with 10mm offset | Halo Platform with 20mm offset | Halo Platform with 30mm offset

Halo Platform

Available to download as a part file from F1 in Schools website

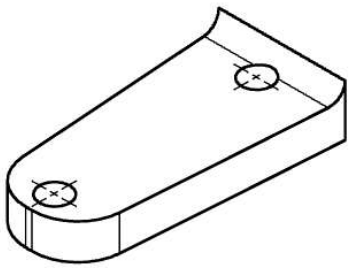

Isometric View

Orthographic Views

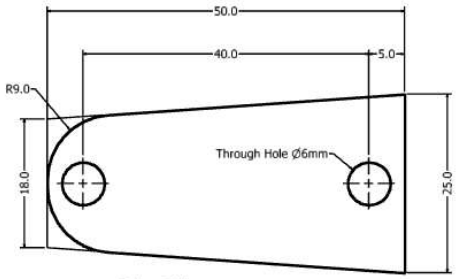

Top View

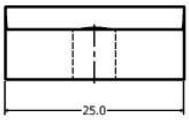

Front View

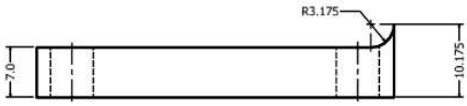

Side View

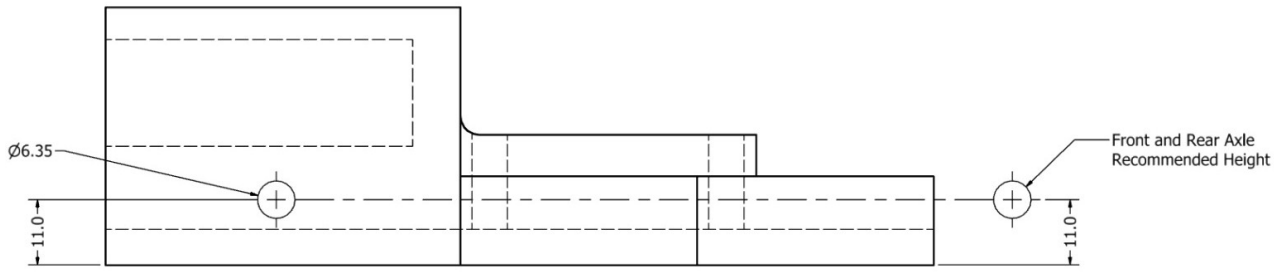

No Go Zone

Appendix iv. Halo

This component is available to download as a FREE 3D part from the STEM Racing website. For this part and more, please visit https://stemracing.es/descargas/

The new development class no-go-zone has a predesigned area to mount the halo on, known as the halo platform. The downloadable no-go-zone's include the halo platform in each of the 4 predefined positions.

To accommodate the 'Halo' your car will require two 6mm holes to be drilled 40mm apart (using the jig provided) using the manufacturing instructions in appendix iv. The halo platform and no-go-zone have been developed to ensure the centre of the Halo 'Circular notch' for the deceleration system is exactly 34.0 mm ±1.0mm above the track surface. To achieve this, you must ensure the centre of your axle holes are 11mm above the bottom of your car body. *Use the dimensions on the diagrams below to check you have manufactured your Halo correctly.*

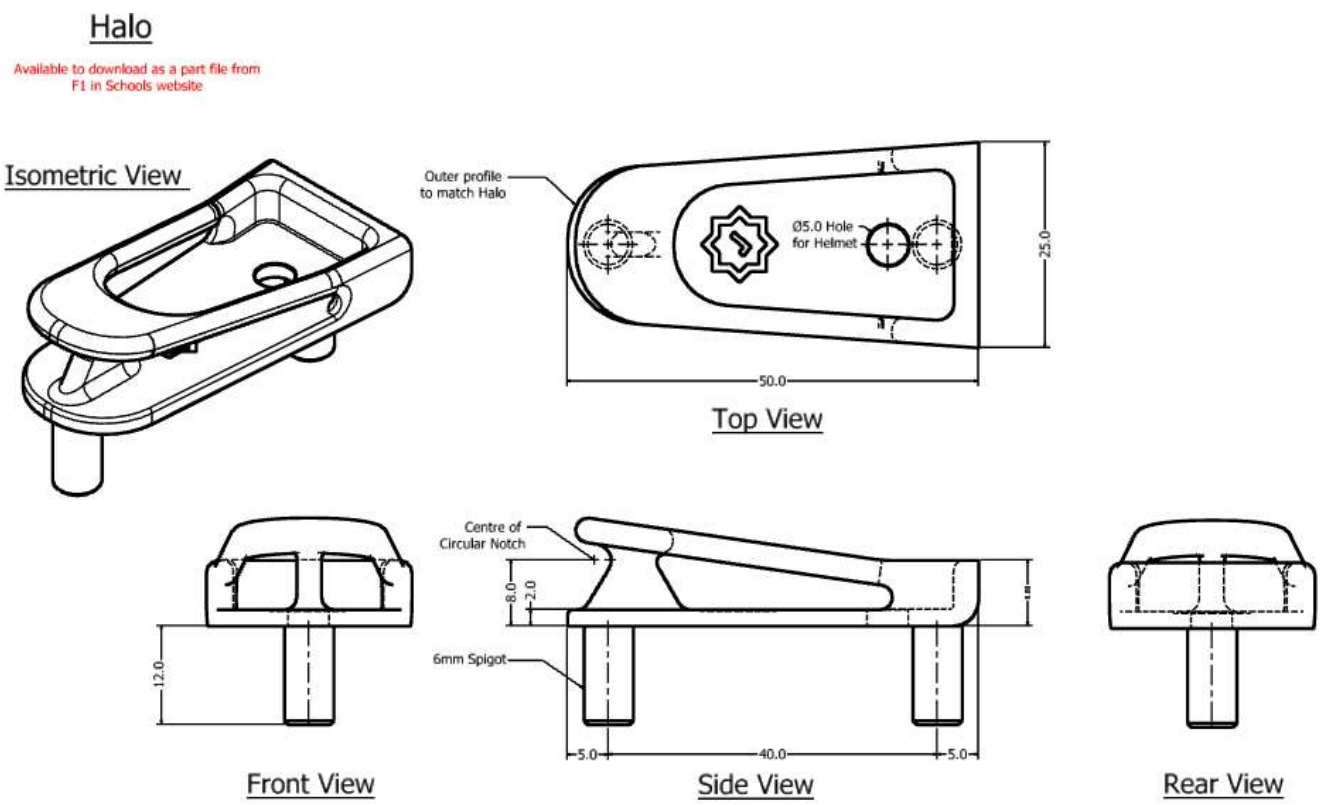

Preparing for Manufacturing

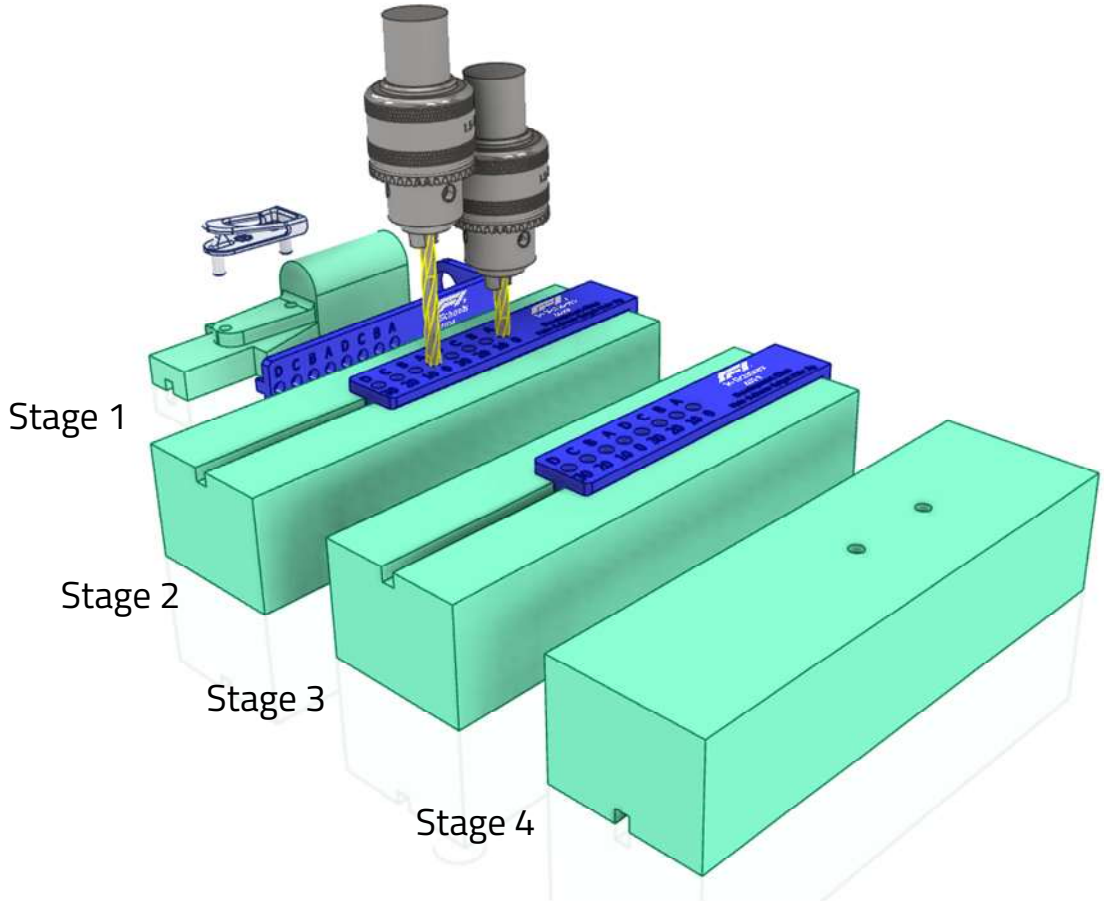

Stage 1

When you have your car designed, the first stage in the manufacturing process is to determine where the Halo is to be positioned. This can be 0, 10, 20, or 30mm from the chamber bulkhead in the No-Go-Zone. Using the drilling jig that can be downloaded (https://stemracing.es/descargas/) and 3D Printed, identify the holes that correspond with the distance.

Stage 2

Place the drilling jig in the tether line slot and press the end tightly against the chamber hole. Using a 6mm drill in a pillar drill; securely fasten the block and jig. Now carefully drill two holes completely through the model block using the jig as a guide.

Stage 3

Remove the drilling jig.

Stage 4

Turn the model block over and check the holes have gone completely through the block. Next check that your Halo will fit in the holes... do not press it fully in!! Just enough to confirm it will fit.

Following these procedures, you can start to machine two sides on the CNC machine using the Quick Cam Pro Wizard.

Appendix v. Development Class standard wheel design

This component is available to download FREE as a universal 3D CAD part from the STEM Racing website. For this part and more, please visit: https://stemracing.es/descargas/

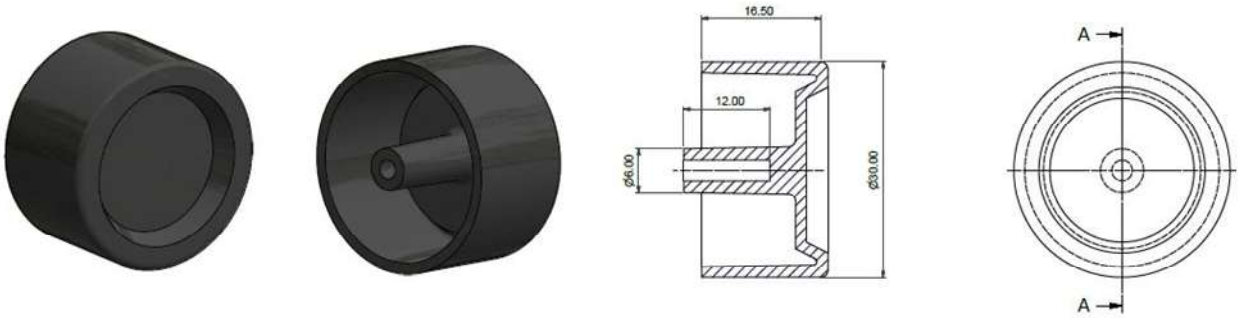

Individual wheel weight: 3.5-3.8g

Appendix vi. Development Class standard axle

This component is available to download FREE as a universal 3D CAD part from the STEM Racing website. For this part and more, please visit: https://stemracing.es/descargas/

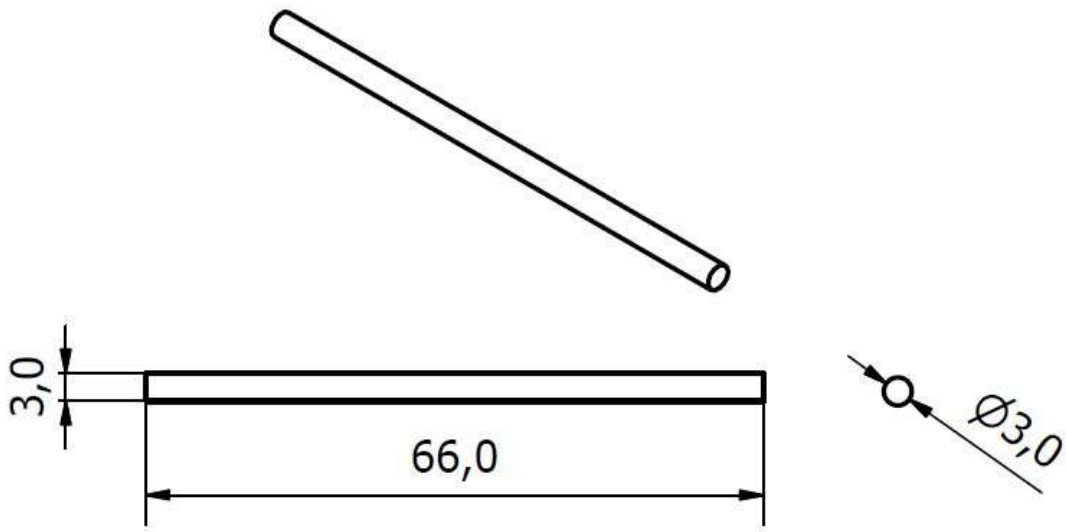

Individual axle weight: 4g

Please make sure you have also read the corresponding STEM Racing SPAIN Competition Regulations

Work hard, see you on the track!

If you need any help at all, just get in touch with us:

STEM Racing™

Engineering in Motion

T: +34 647 934 597

E: contacto@stemracing.es

W: https://stemracing.es/